Transceiver Technologies for THz Applications

Karam Noujeim, Ph.D.
Technology Fellow
Anritsu USA,
Morgan Hill, CA 95037

Introduction

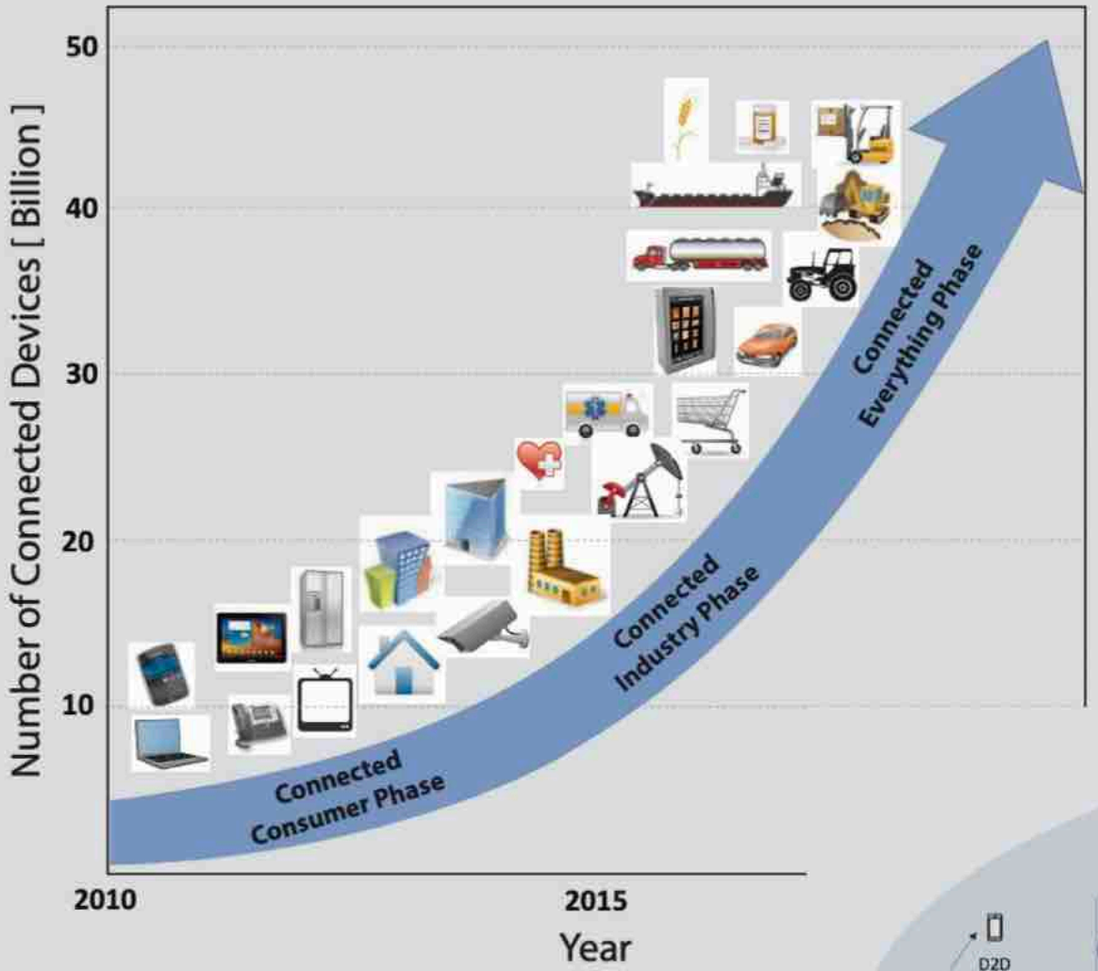

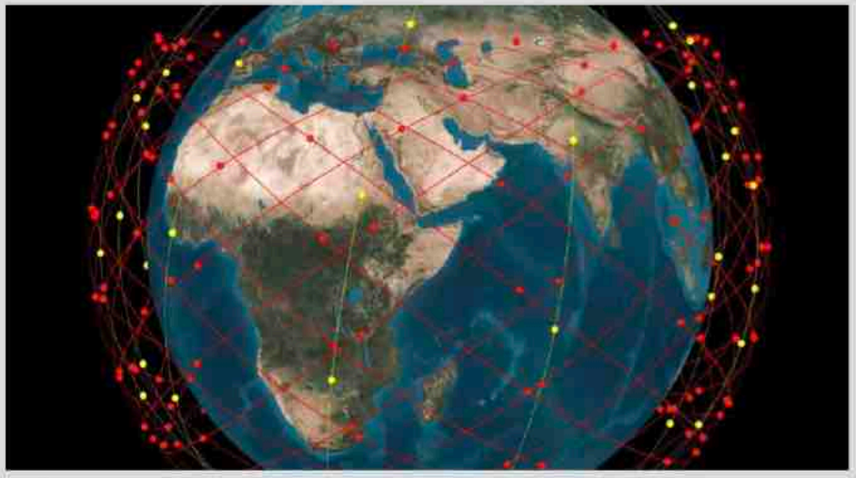

Reference: Telesat

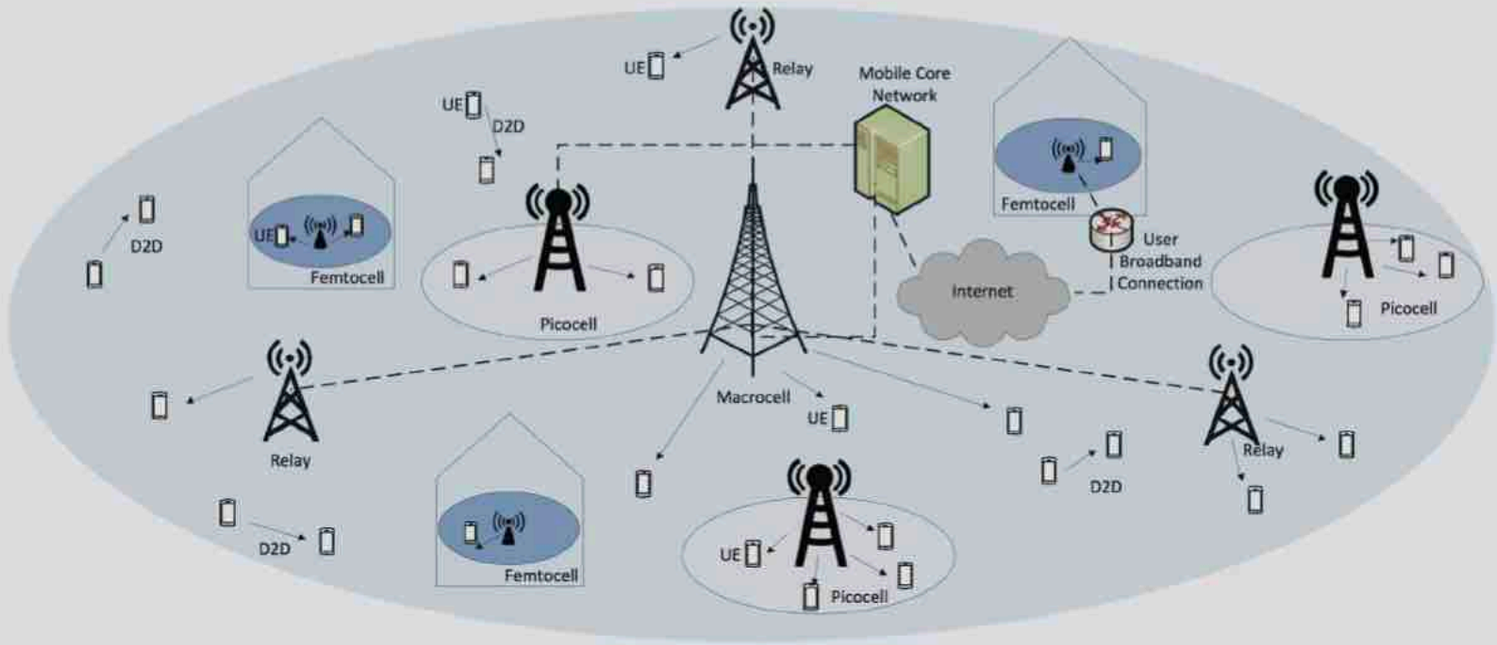

Reference: http://icc2014.ieee-icc.org/2014/private/Tutorial6.pdf

Introduction (Cont.)

Low-earth-orbit (LEO) satellites (thus lower latency, e.g. ~20 ms)

- Samsung: ~4600 satellites
- Google: ~700 satellites (~150 Kg weight)
- OneWeb: ~700 satellites (~150 Kg weight). 12–18 GHz
- SpaceX: ~4000 satellites

Introduction (Cont.)

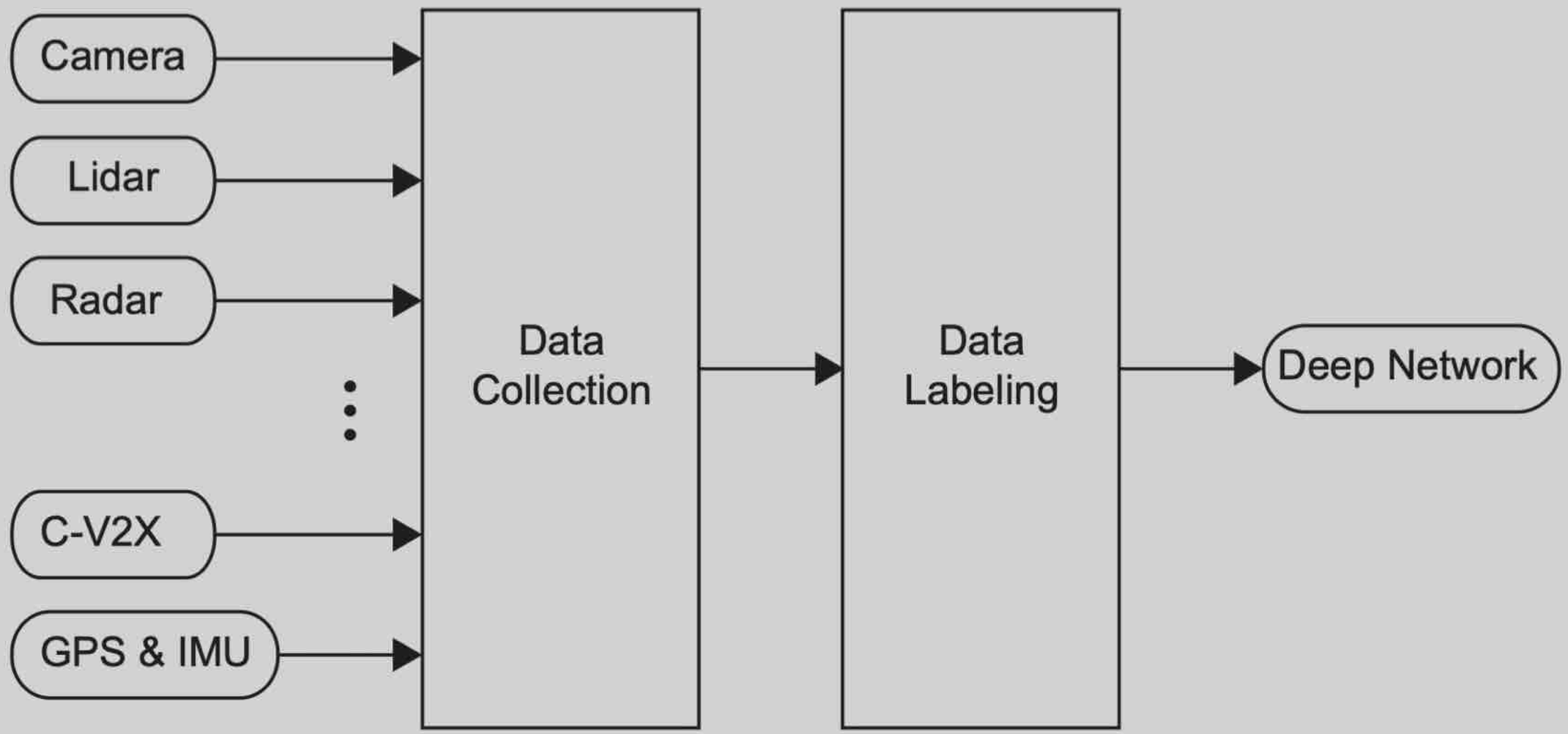

Machine Learning (Offline Process)

Introduction (Cont.)

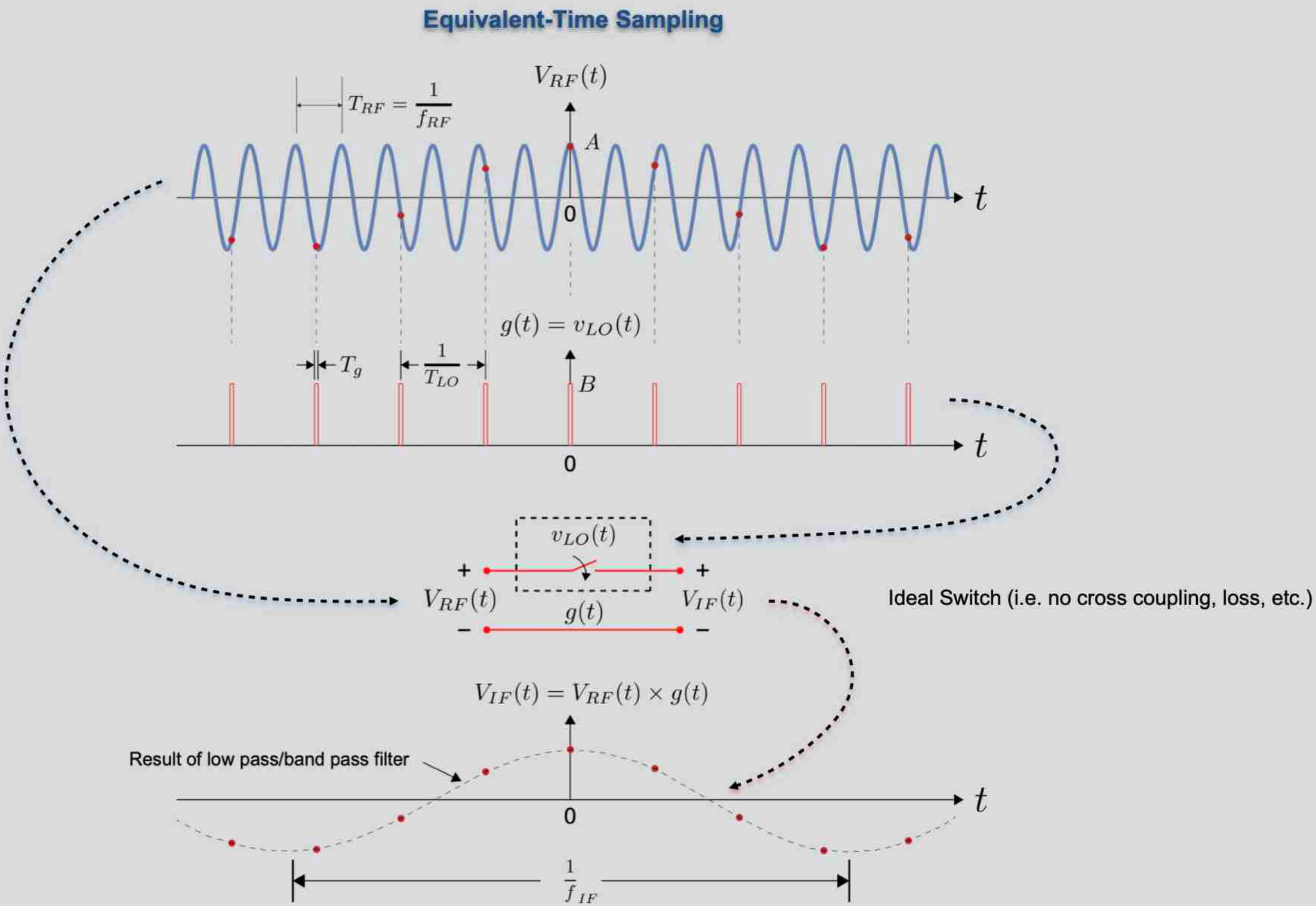

Introduction (Cont.)

Equivalent-Time Sampling: Convolution of Spectra

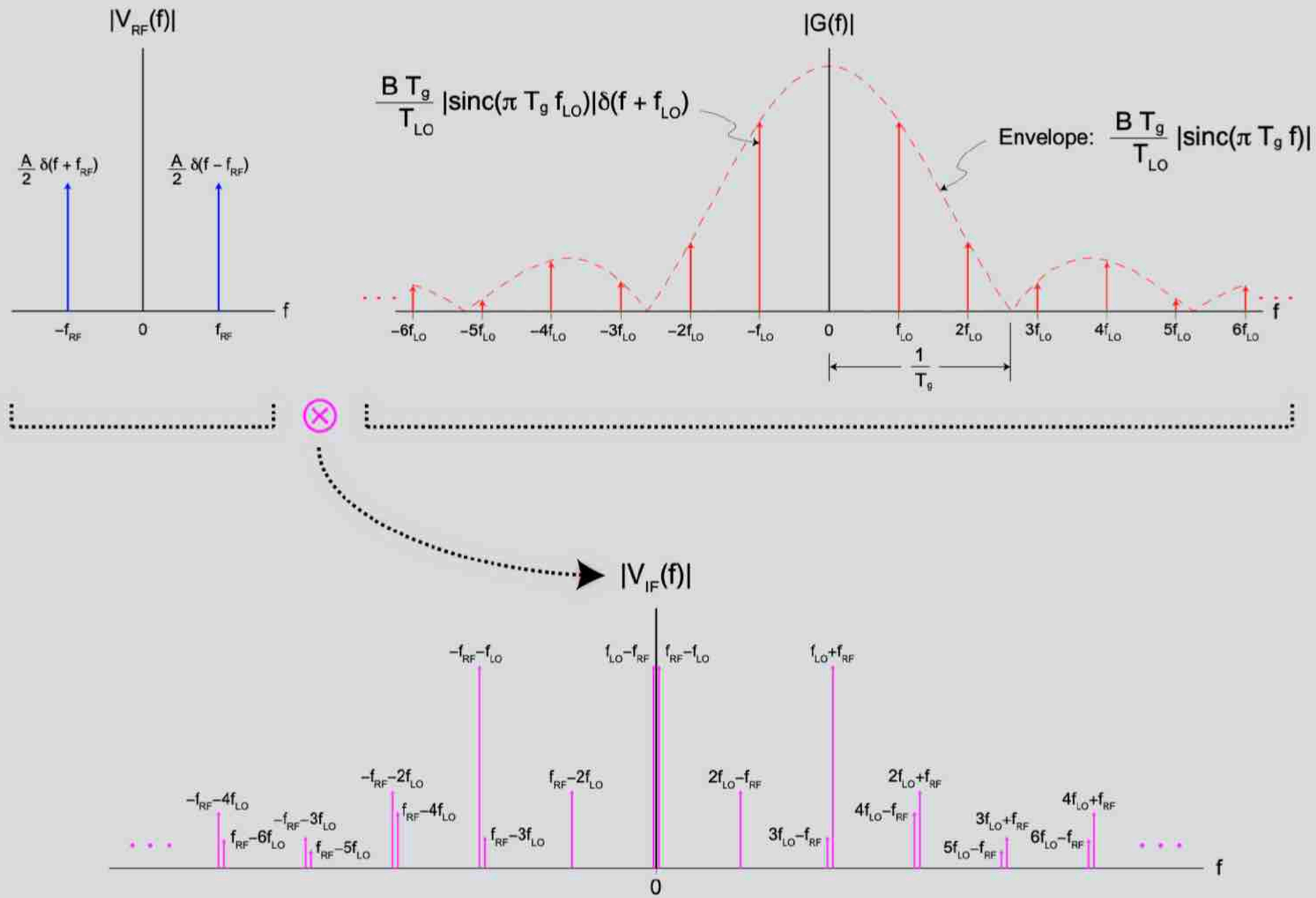

$$V_{IF}(f) = V_{RF}(f) \otimes G(f) = \frac{A \cdot B \cdot T_g}{2T_{LO}} \sum_{n=-\infty}^{\infty} \mathrm{sinc}\left(\frac{n \cdot \pi \cdot T_g}{T_{LO}}\right)[\delta(f - f_{RF} - n \cdot f_{LO}) + \delta(f + f_{RF} - n \cdot f_{LO})]$$

Introduction (Cont.)

Equivalent-Time Sampling: Switch Response

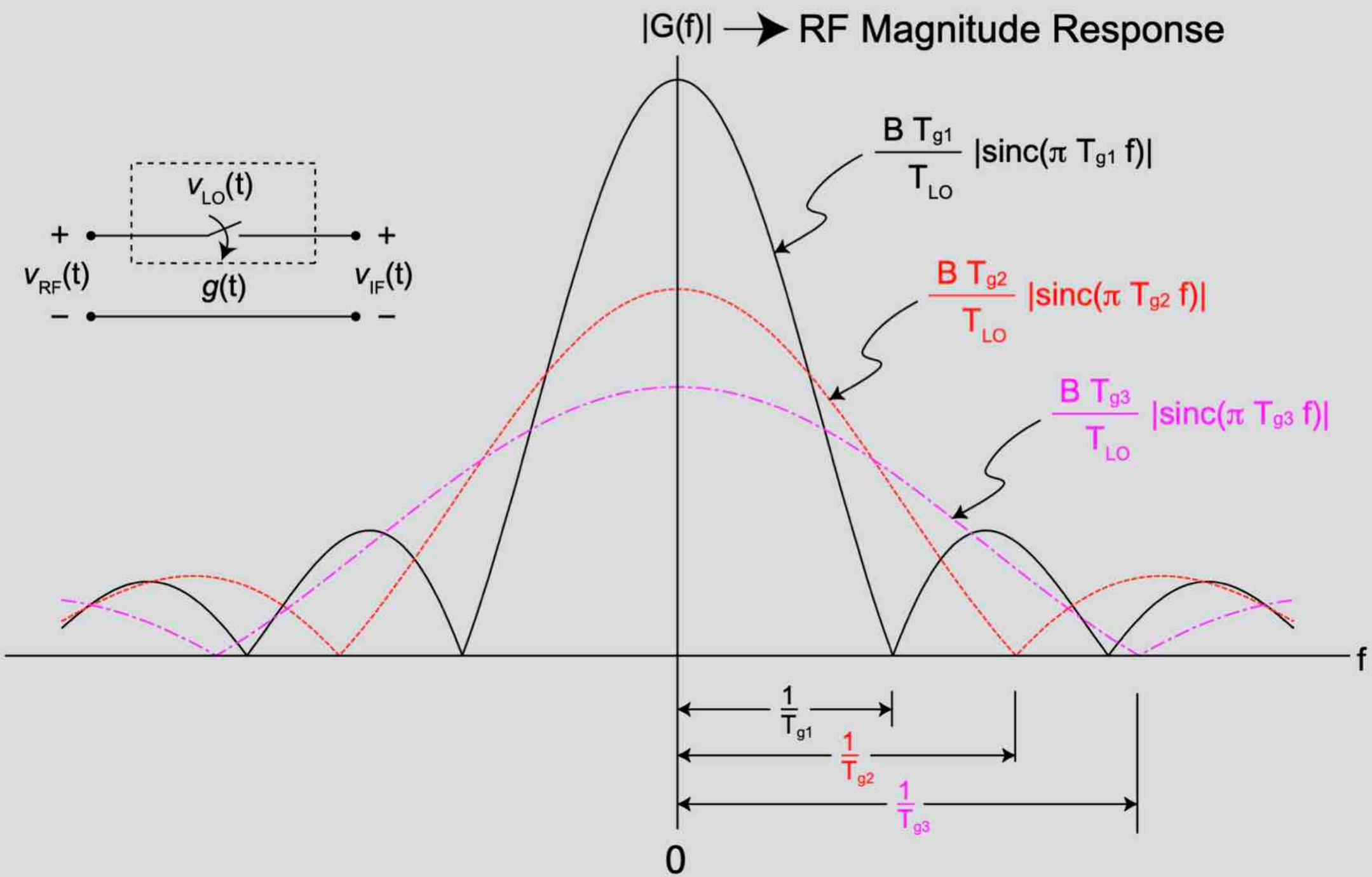

Introduction (Cont.)

SRD-Based Sampler

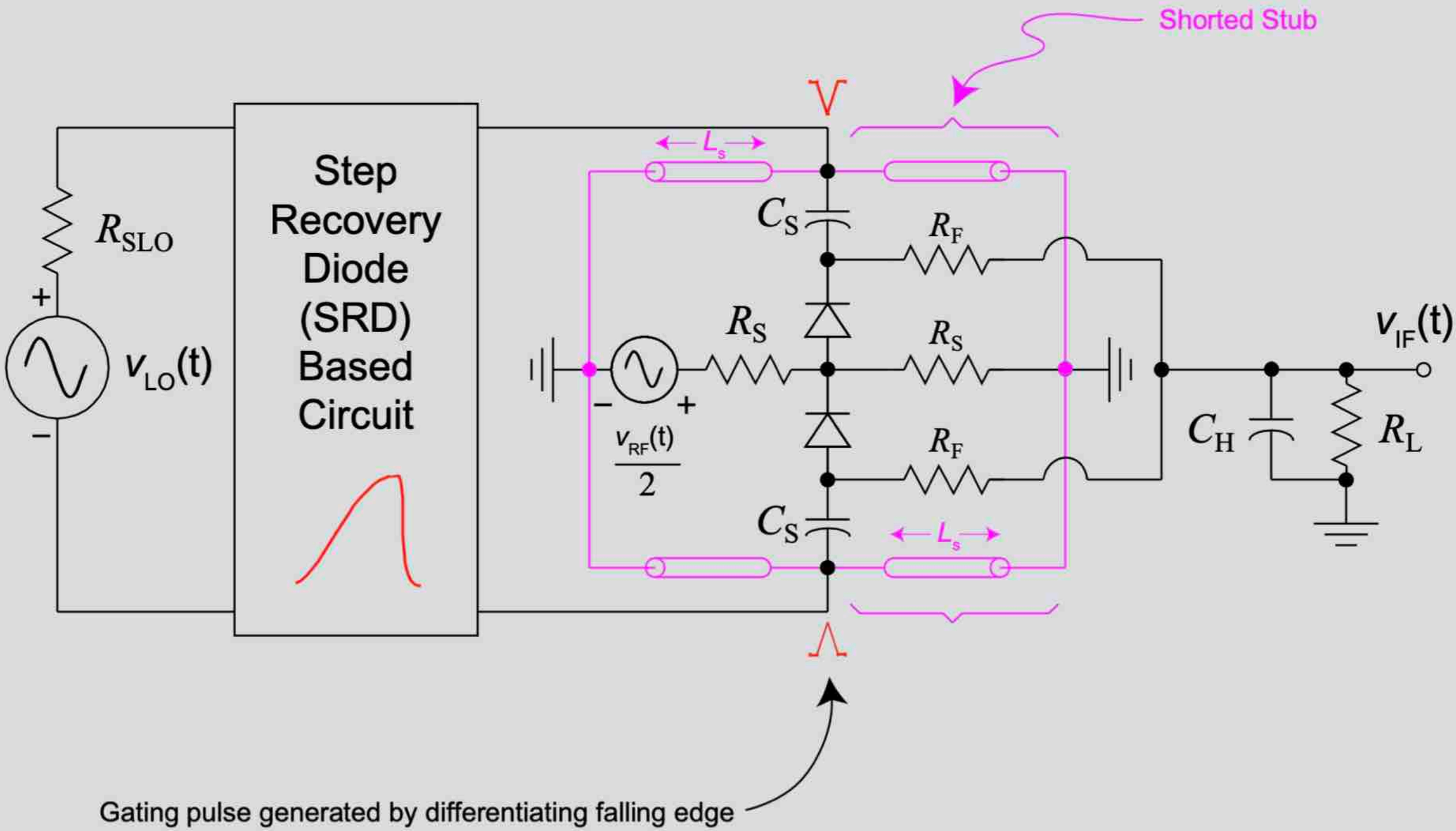

Introduction (Cont.)

Sampler: An Equivalent Circuit

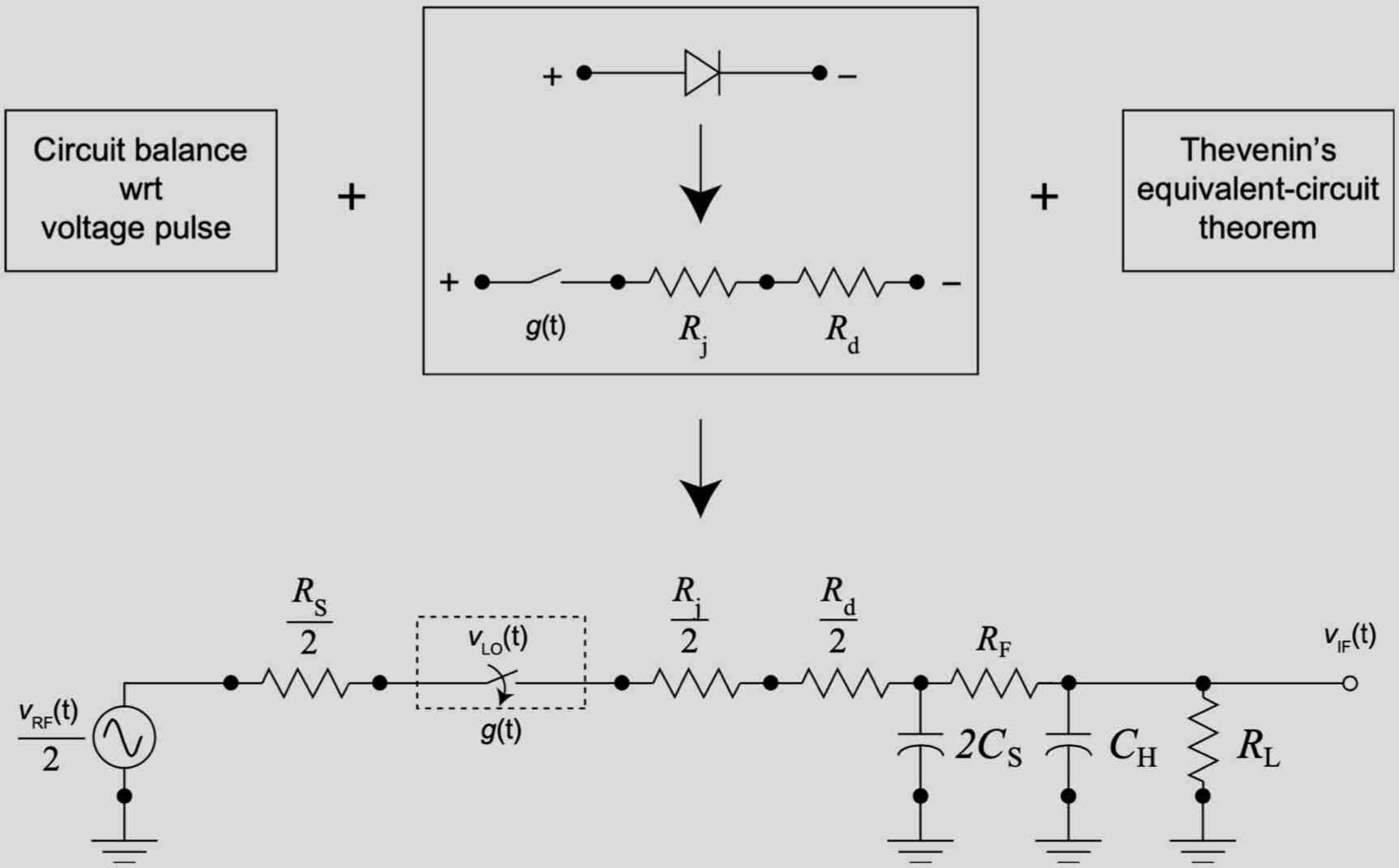

Introduction (Cont.)

SRD-Based Sampling VNA

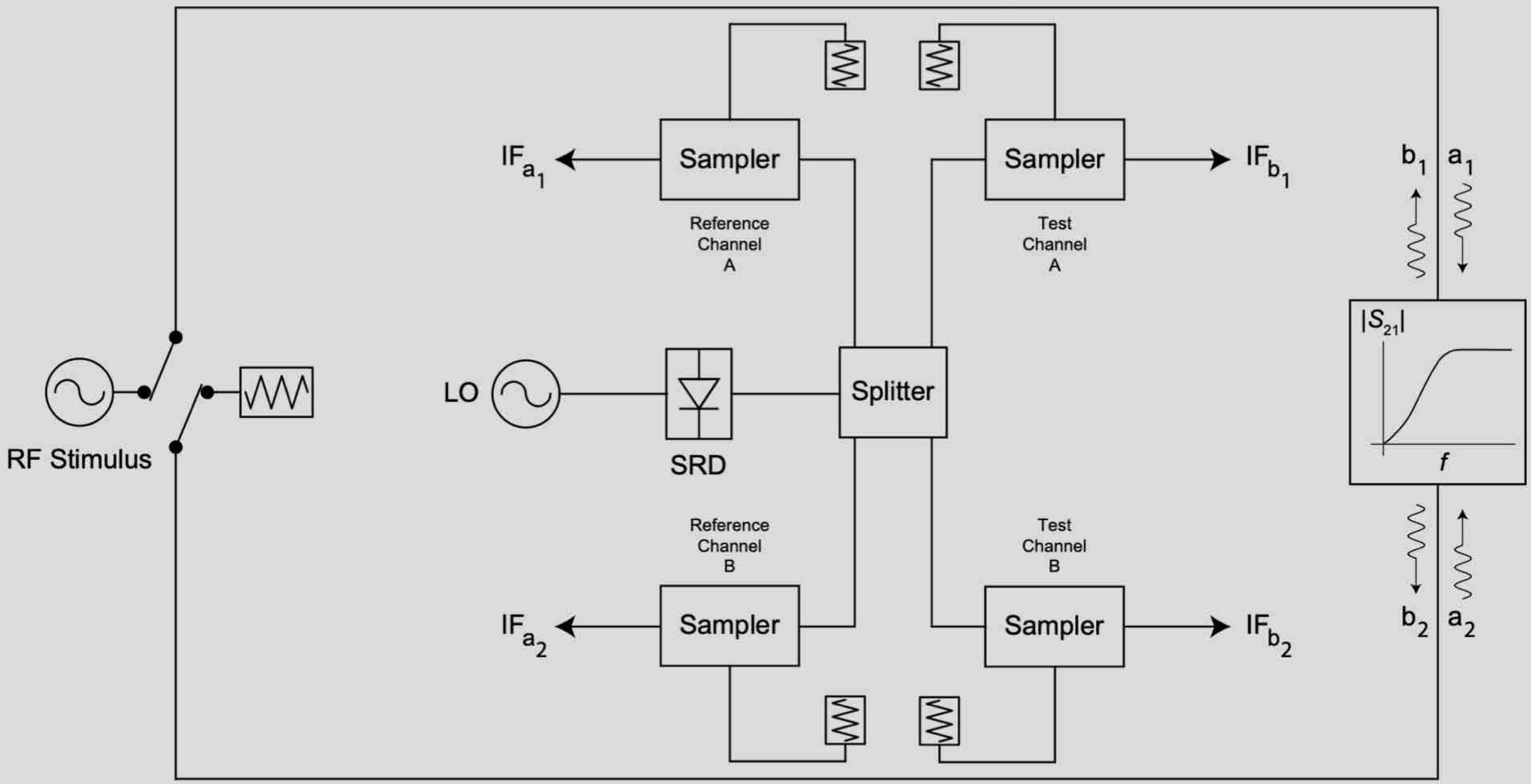

$$S_{21} = b_2/a_1$$

Introduction (Cont.)

SRD-Based Sampling VNA: Weaknesses

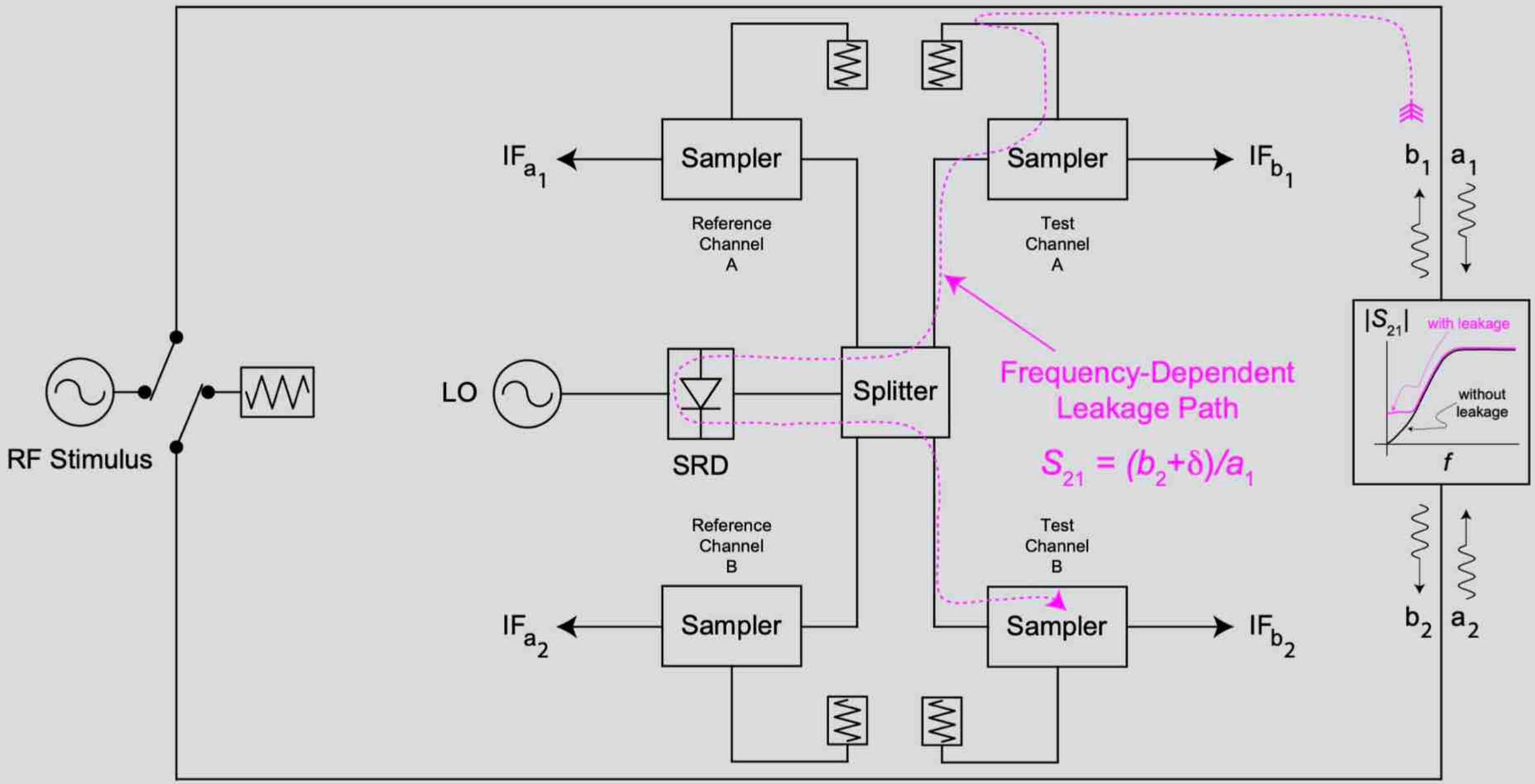

$$S_{21} = b_2/a_1$$

Introduction (Cont.)

SRD-Based Sampling VNAs: Weaknesses

Weaknesses of SRD-based sampling VNAs

- **Leakage between test channels**

  ⇒ **Reduced dynamic range**

  ⇒ **Inability to completely characterize the cutoff region of high-pass filters, weak crosstalk, etc.**

- **Limited sampling-pulse aperture**

  ⇒ **Limited RF bandwidth**

- **Limited LO bandwidth (i.e. < 1 GHz)**

  ⇒ **High harmonic order operation (i.e. $n \times f_{LO}$, large n)**

  ⇒ **Reduced dynamic range**

- **Lack of RF and LO frequency scalability**

Introduction (Cont.)

Sampling VNA wish list

- **Scalable RF bandwidth**

  ⇒ Ability to extend measurements to mm-wave frequencies and beyond

- **Scalable LO bandwidth**

  ⇒ Low harmonic order operation (i.e. $n \times f_{LO}$, small n)

  ⇒ Enhanced dynamic range

- **High isolation between test channels**

  ⇒ High dynamic range

  ⇒ Ability to characterize heigh-cutoff filters, 2nd and 3rd order cross talk, etc.

- **High raw directivity**

  ⇒ Long-term measurement stability

- **Ability to bring the VNA to the DUT or AUT (Device or Antenna under Test)**

  ⇒ Highly phase-stable measurements

- **Etc.**

Introduction (Cont.)

Uniform NLTL

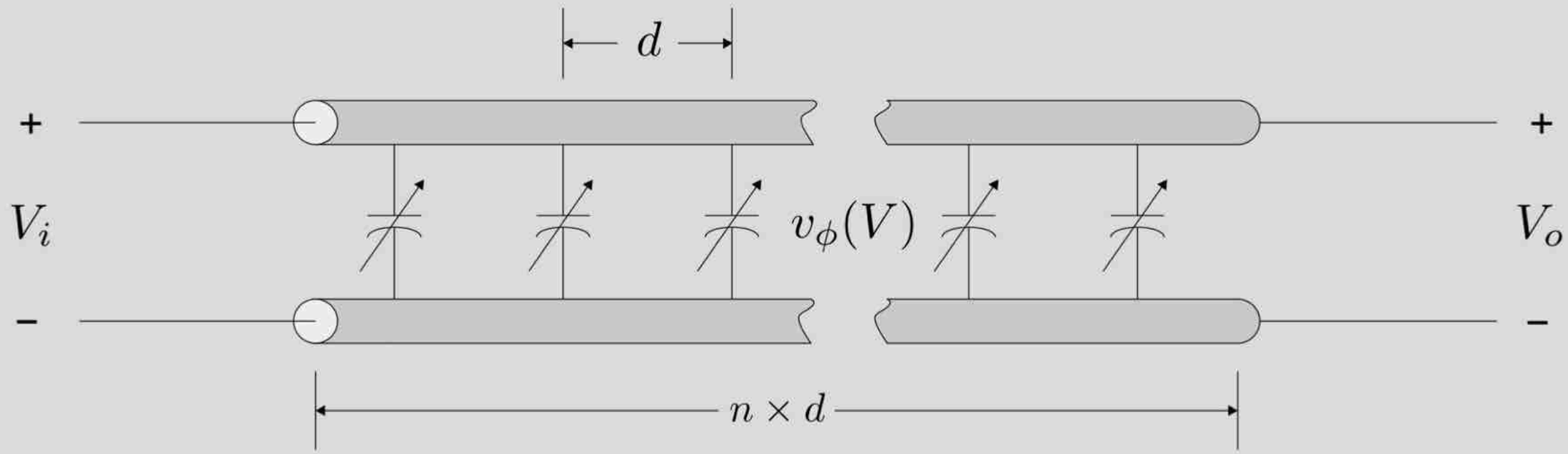

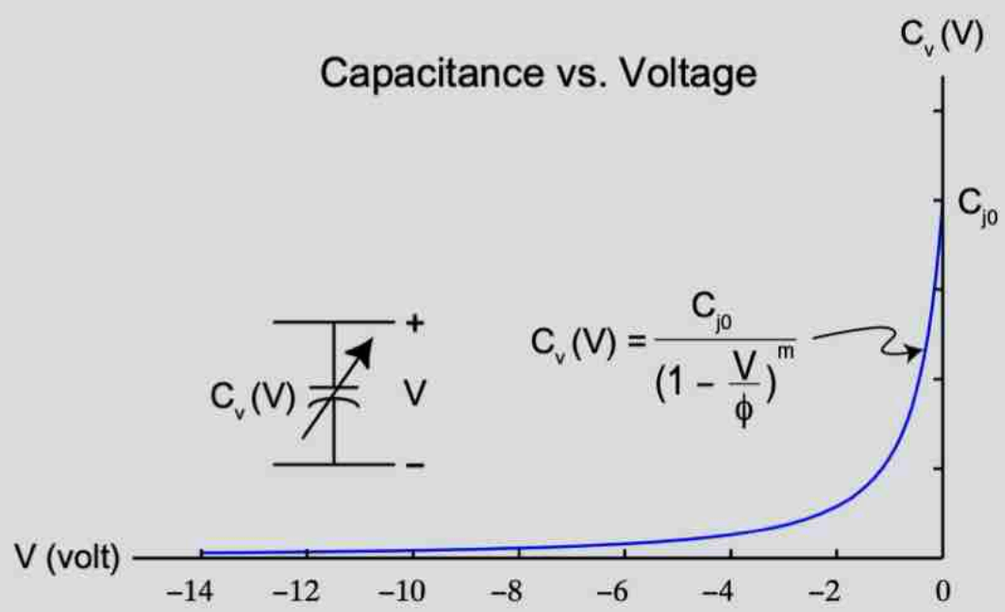

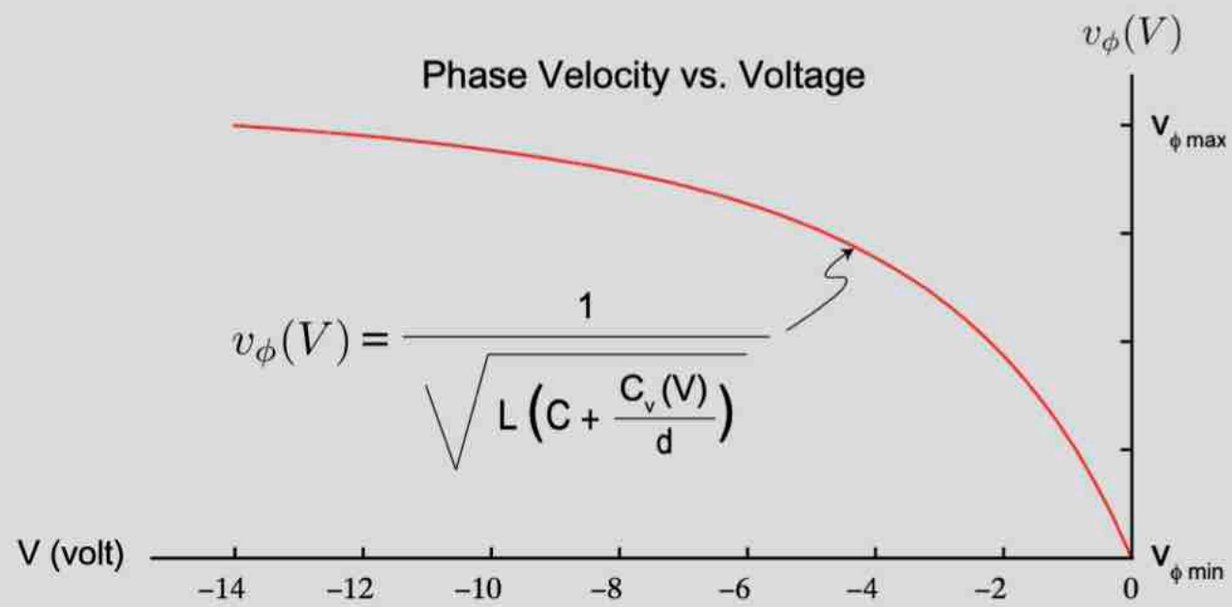

Introduction (Cont.)

Uniform NLTL

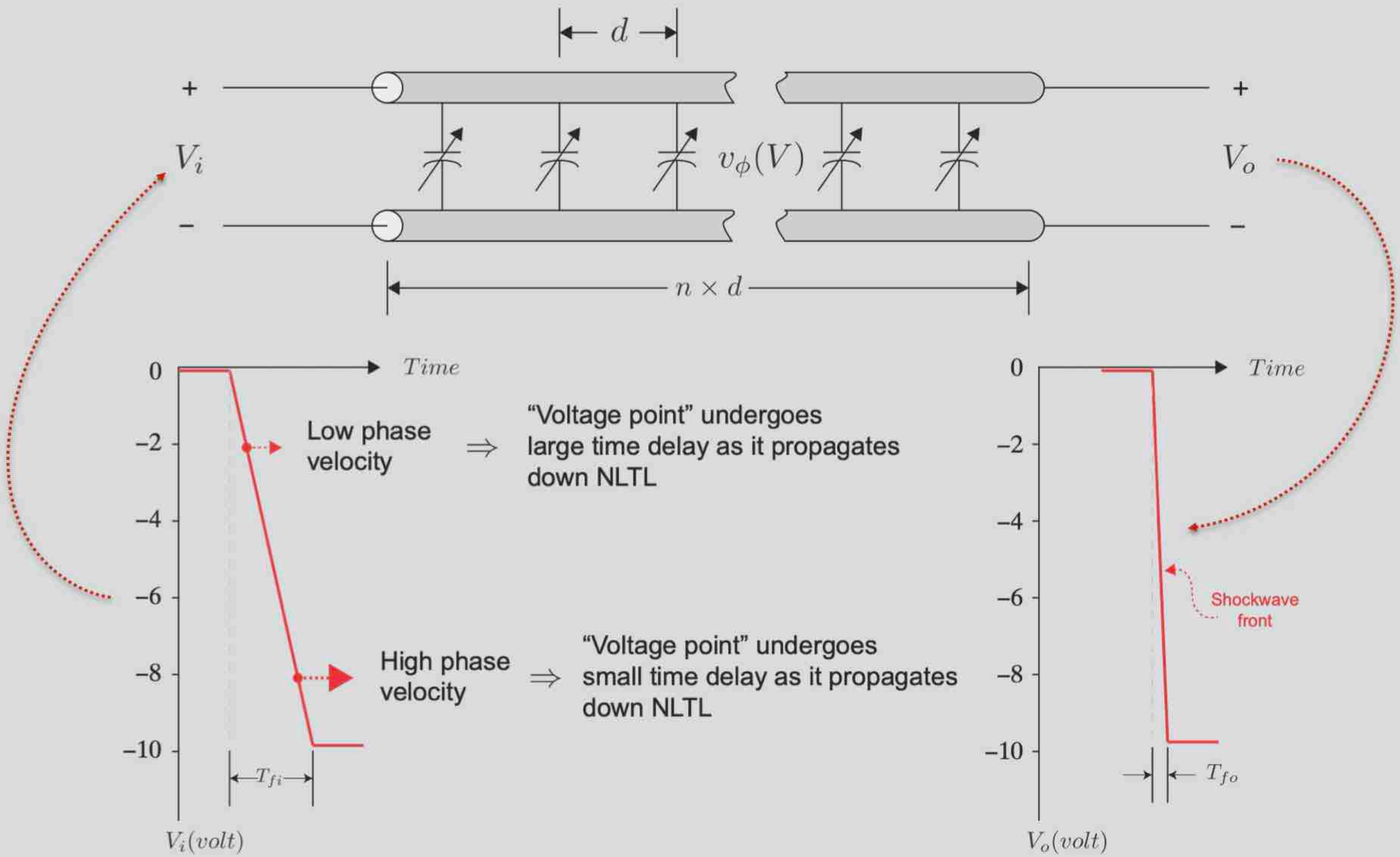

Introduction (Cont.)

Non-Uniform NLTL

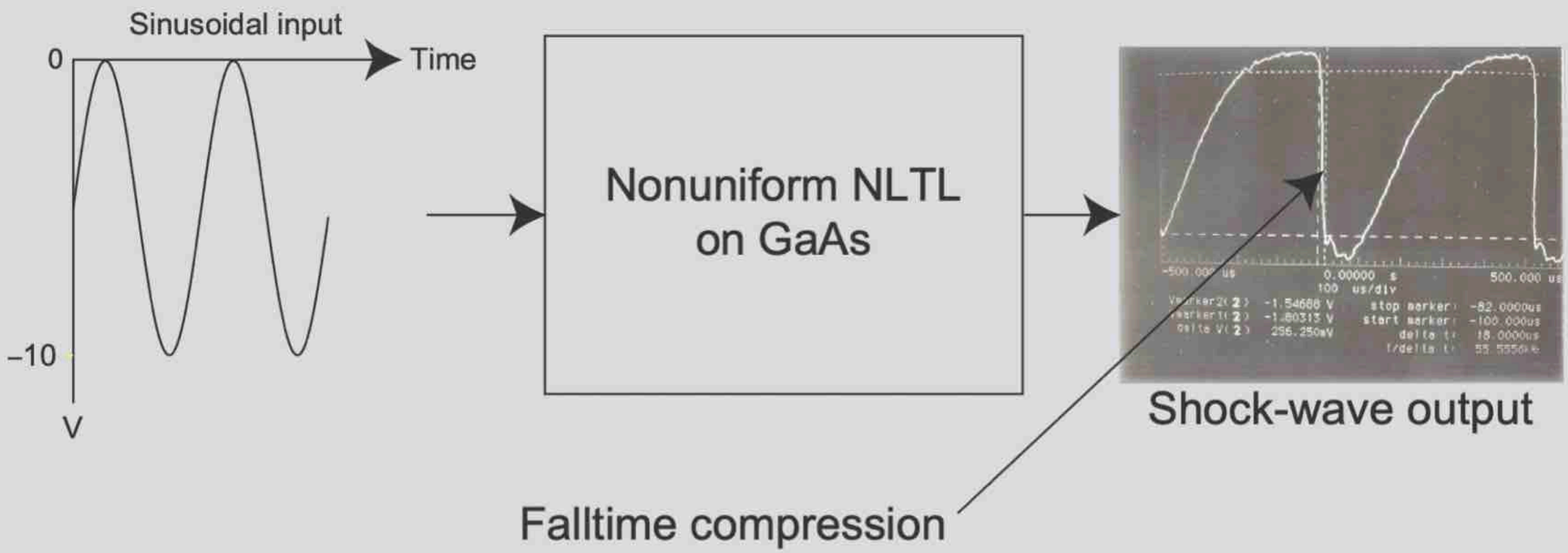

- Nonuniform NLTL made up of 45 sections
- Deconvolved falltime (10% – 90%) ≈ 2.5 ps
- Peak-to-peak output voltage ≈ 4 V
- Input power (DC-offset sine wave) ≈ +24 dBm (10 V_{p-p}) @ 9.0 GHz

Introduction (Cont.)

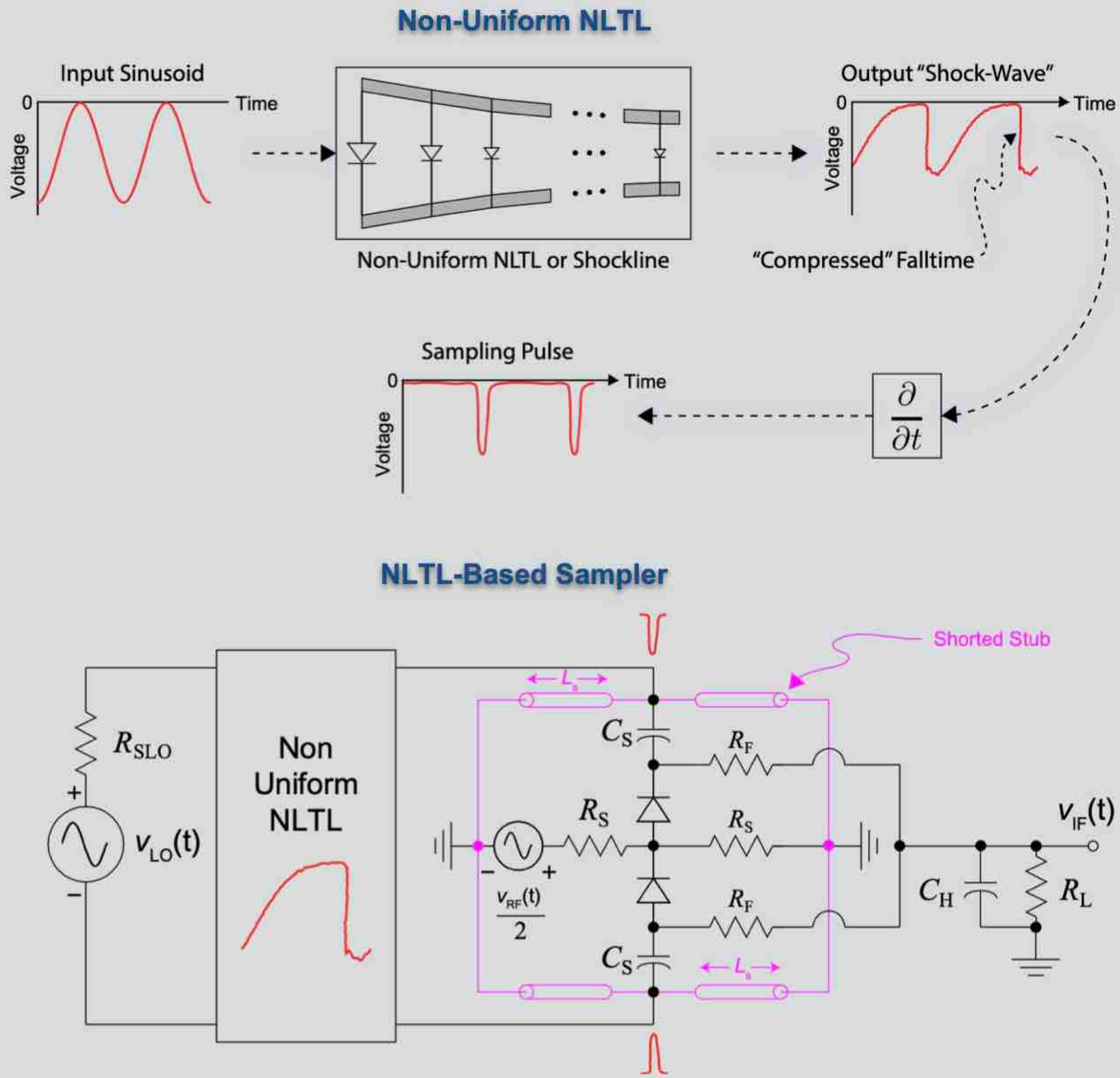

Applications

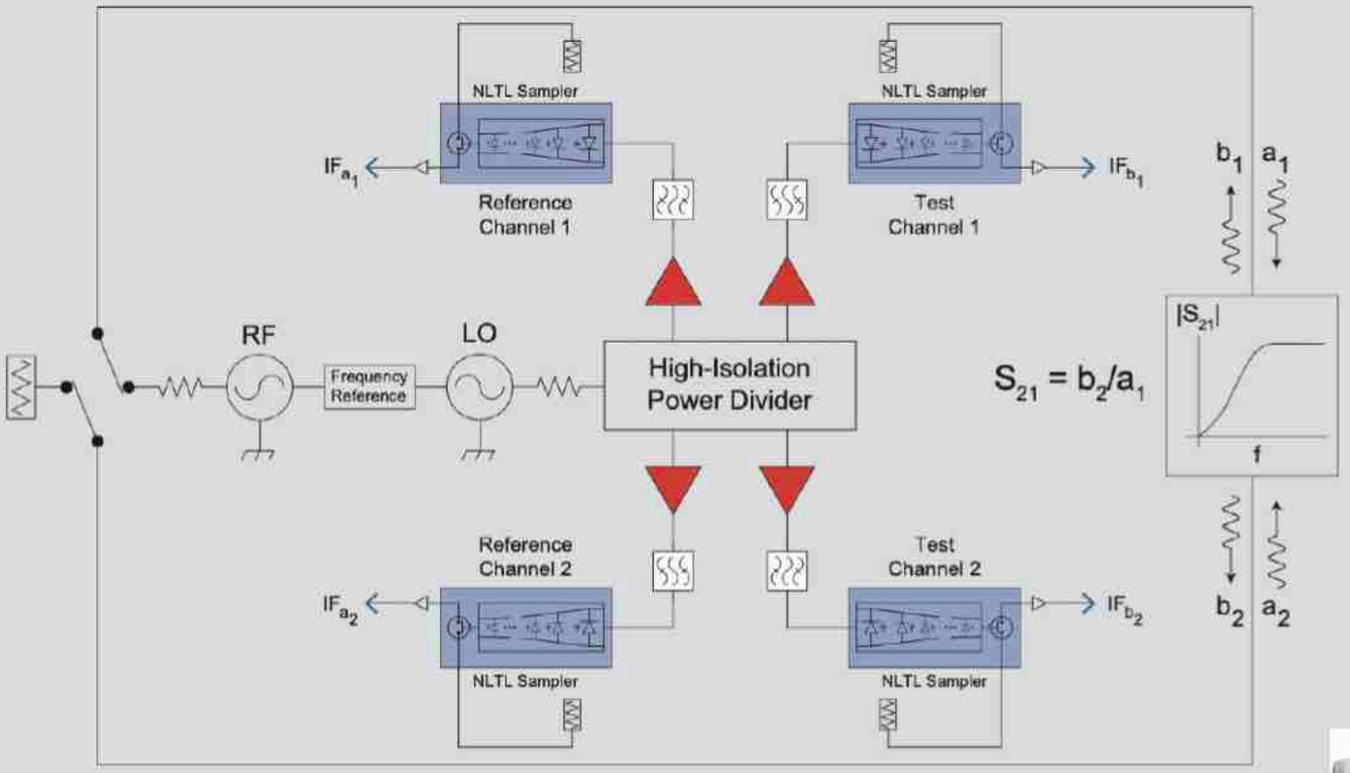

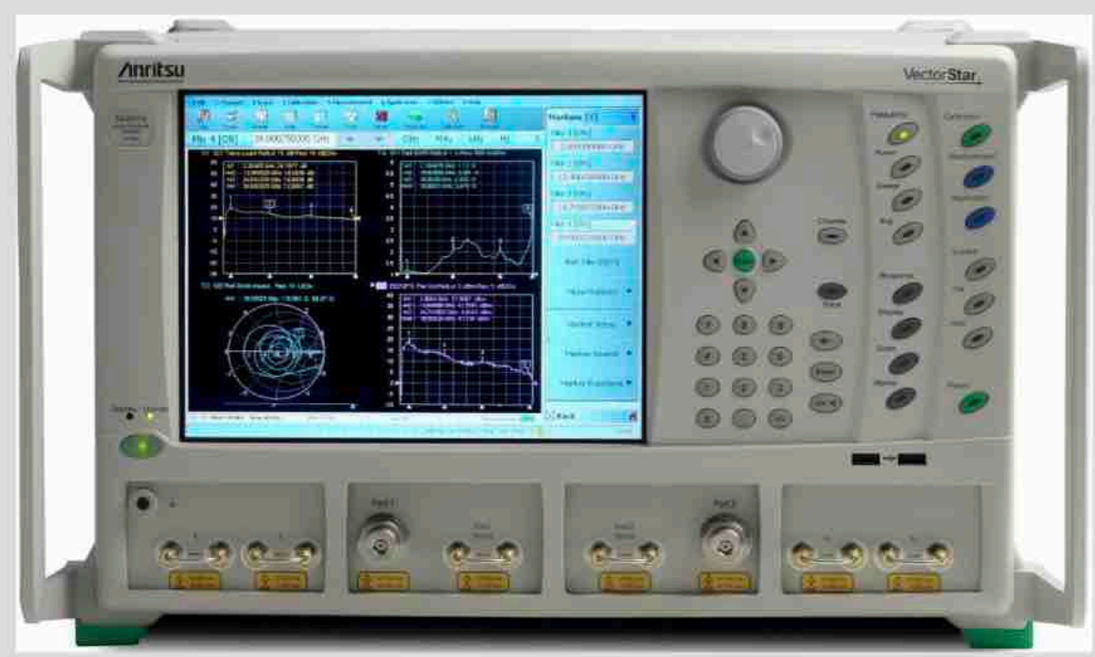

NLTL-Based VNA: Measurements from 70 KHz to 70 GHz

Applications (Cont.)

Receiver Extensions

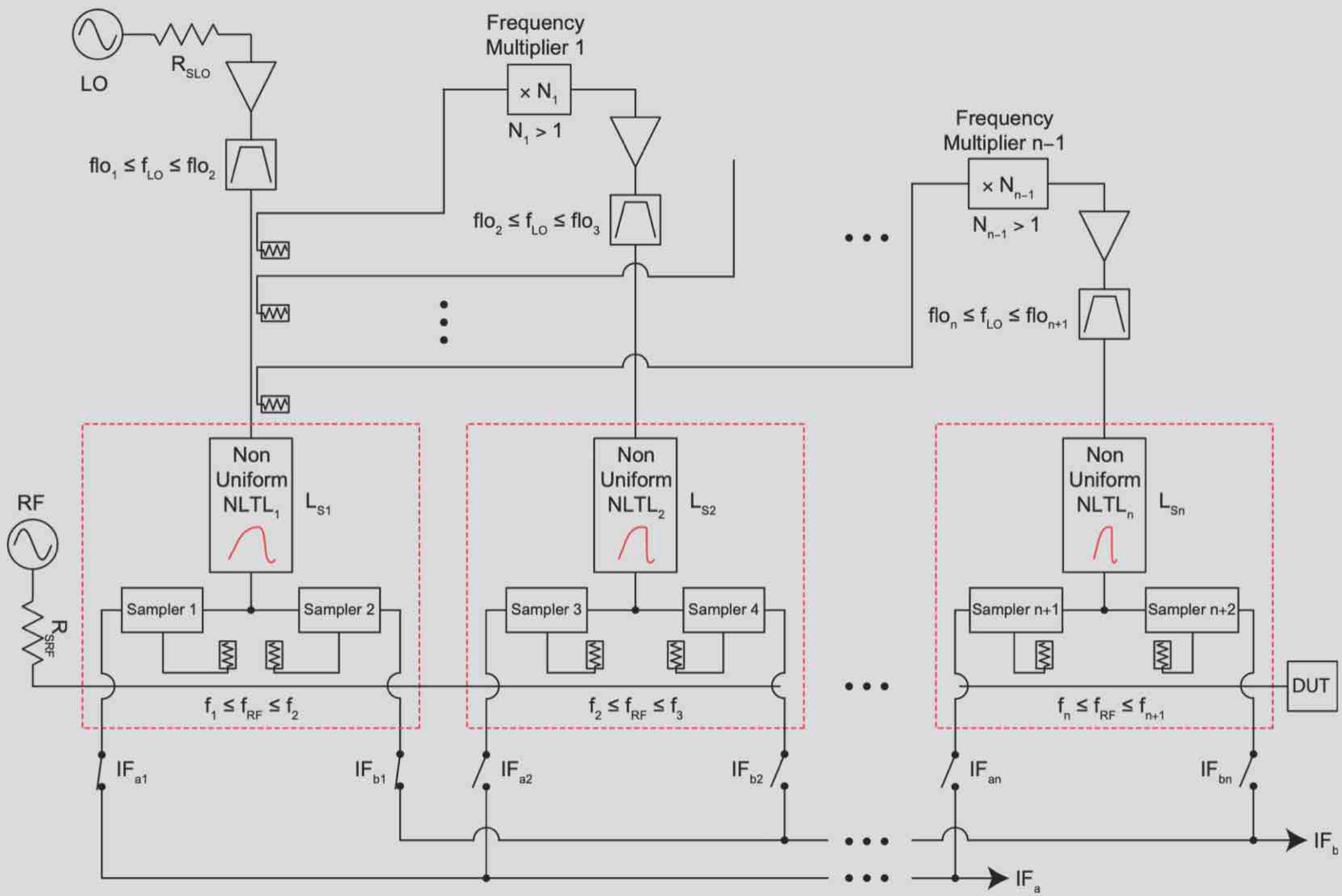

Anritsu

Applications (Cont.)

Frequency-Scalable NLTL-Based Source/Stimulus Extension

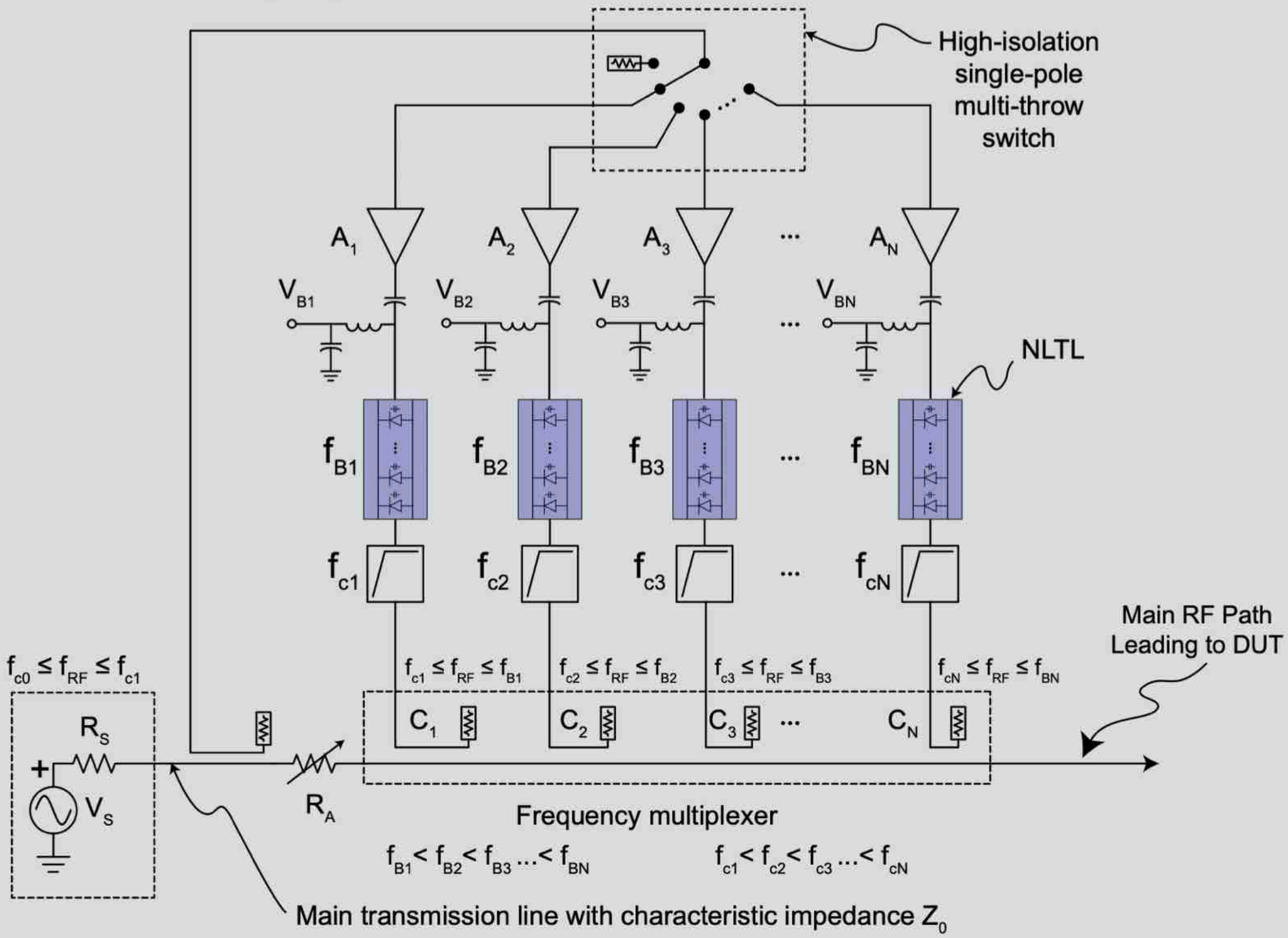

Applications (Cont.)

NLTL-Based Tethered-VNA Architecture

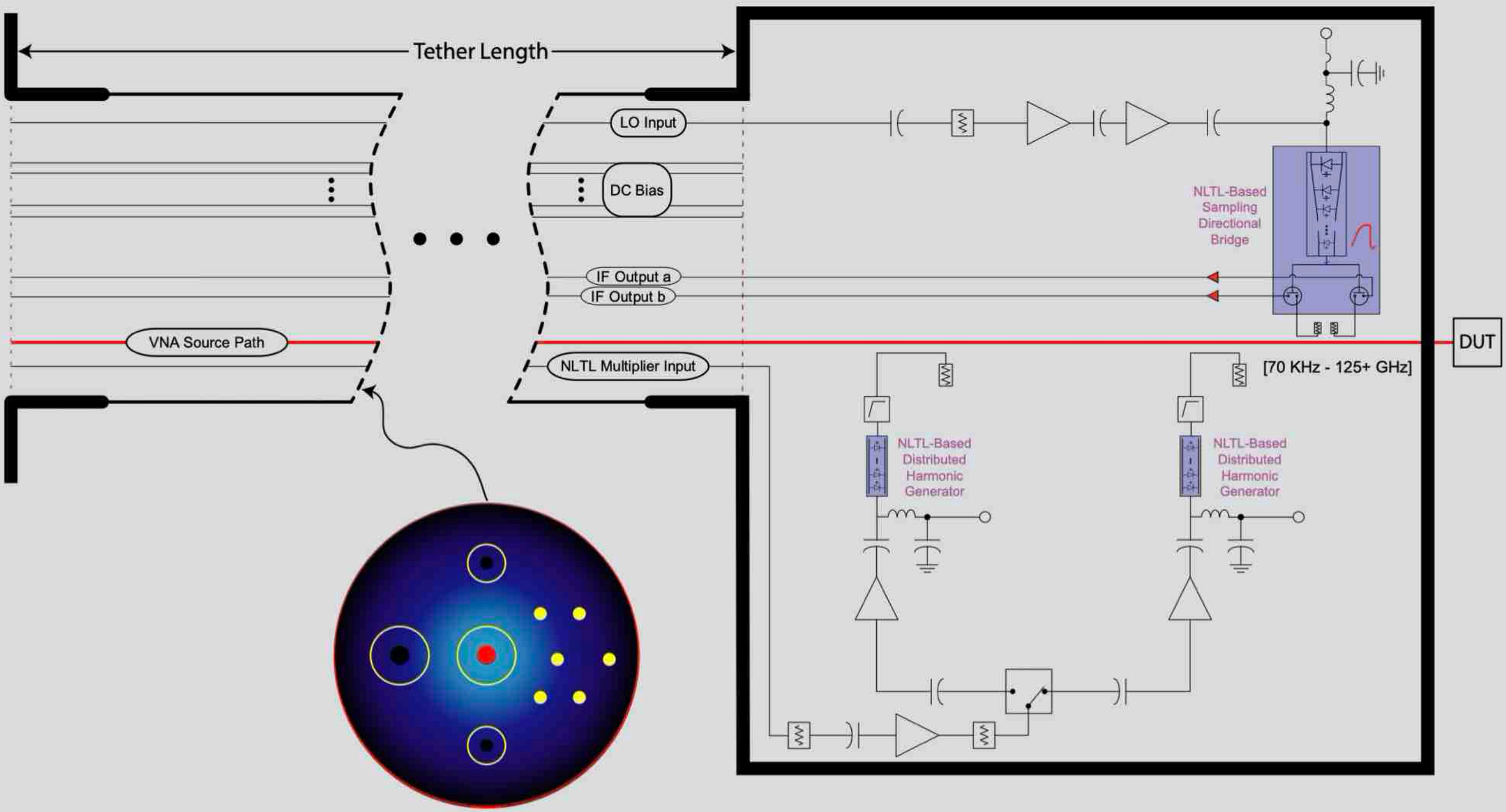

Applications (Cont.)

NLTL-Based Tethered Modules

[~30 - 110+] GHz VNA Receiver Extension
[~54 - 110+] GHz Reflectometer Extension
1-mm Coaxial Connector

Applications (Cont.)

NLTL-Based Tethered-VNA Architecture

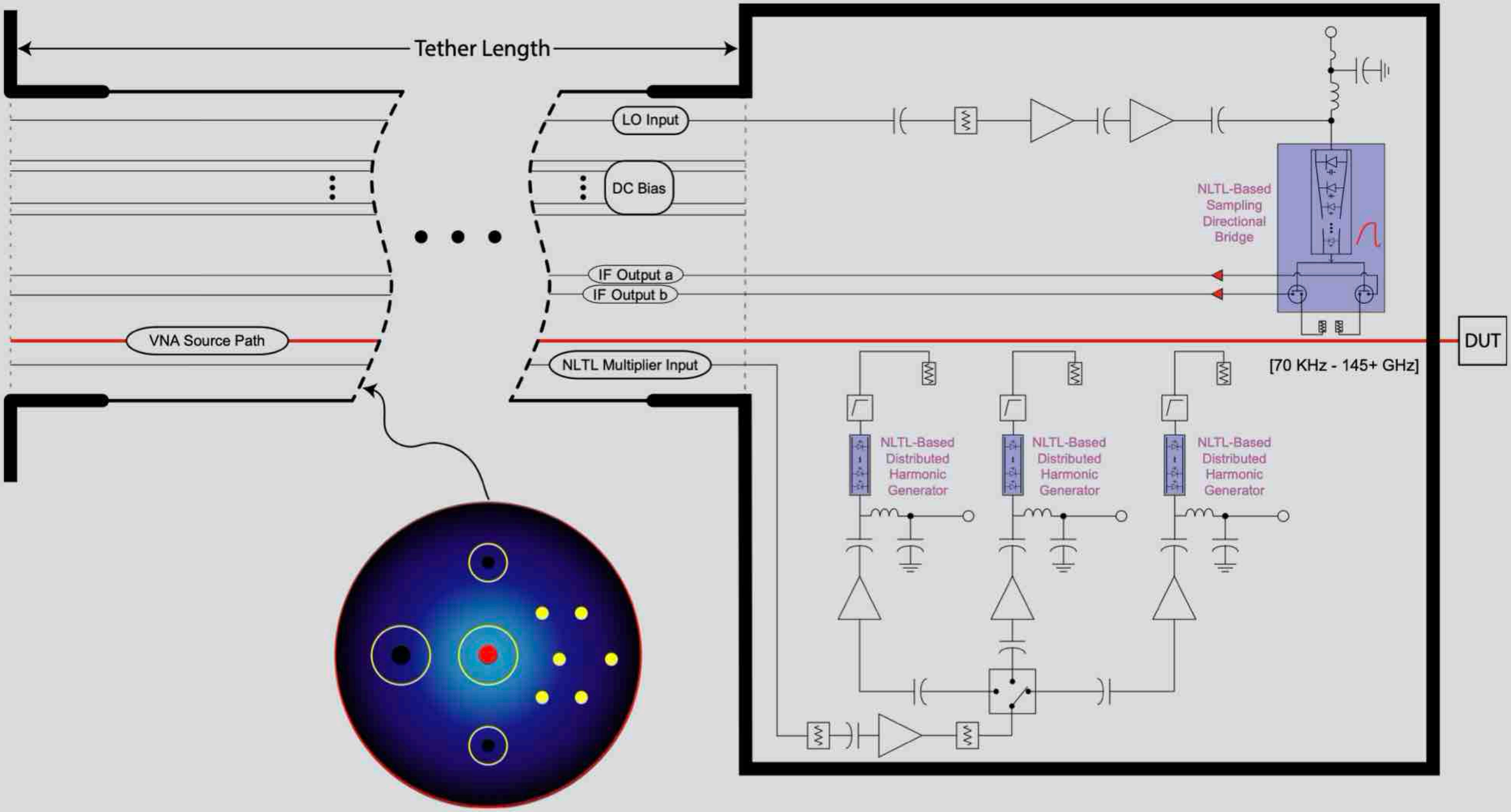

Applications (Cont.)

NLTL-Based Tethered Modules

[~30 - 145+] GHz VNA Receiver Extension
[~54 - 145+] GHz Reflectometer Extension
0.8-mm Coaxial Connector

Applications (Cont.)

On-Wafer VNA Measurements from 70 KHz to 145 GHz

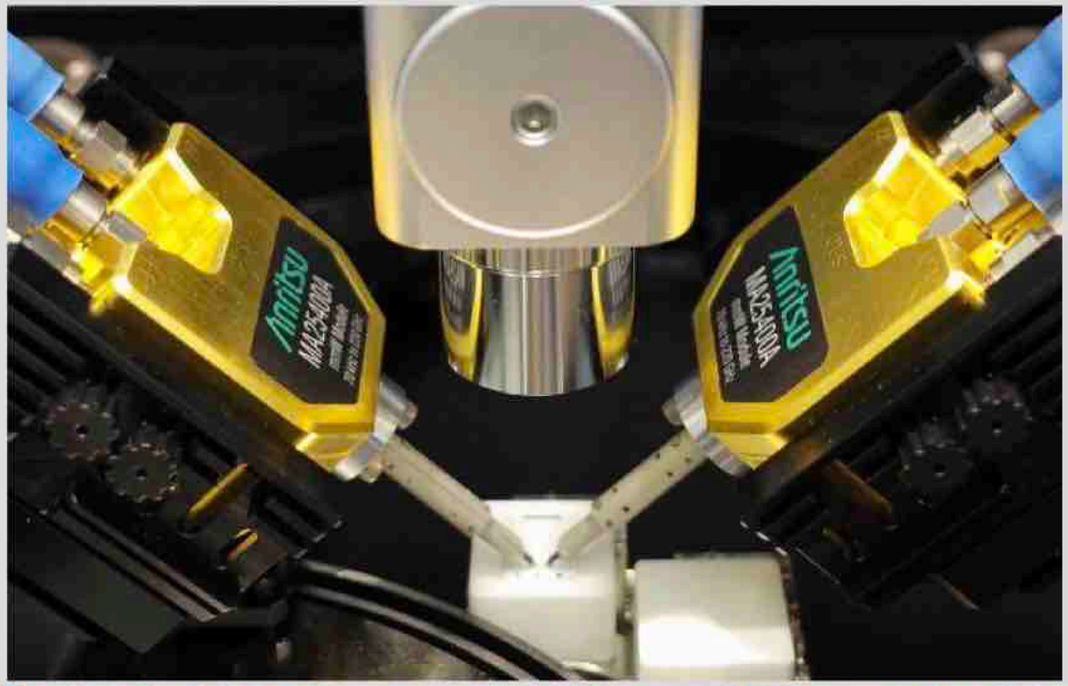

On-Wafer VNA Measurements from 70 KHz to 220+ GHz

Applications (Cont.)

NLTL-Based Tethered VNA: E Band

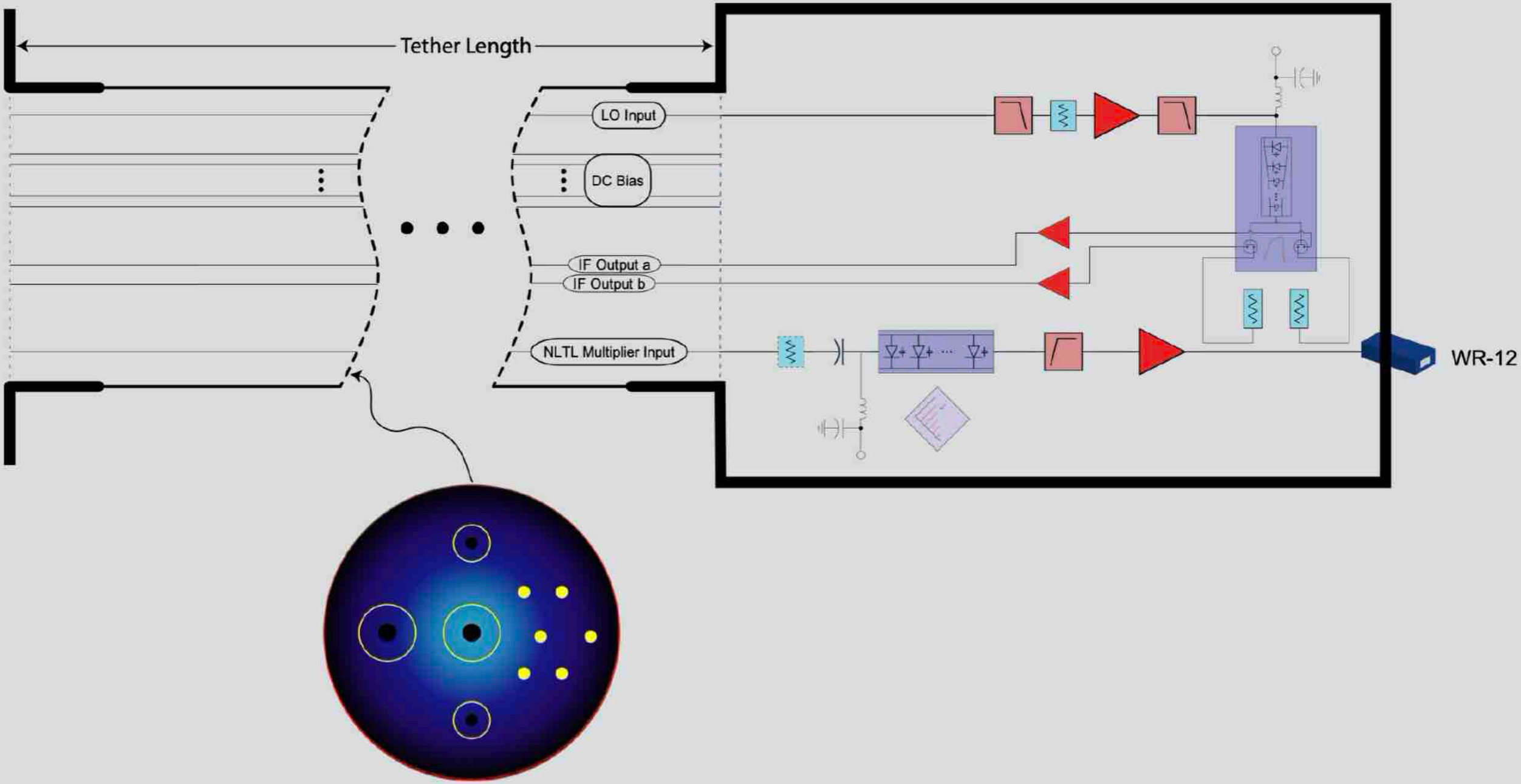

Applications (Cont.)

NLTL-Based Tethered VNA: E Band

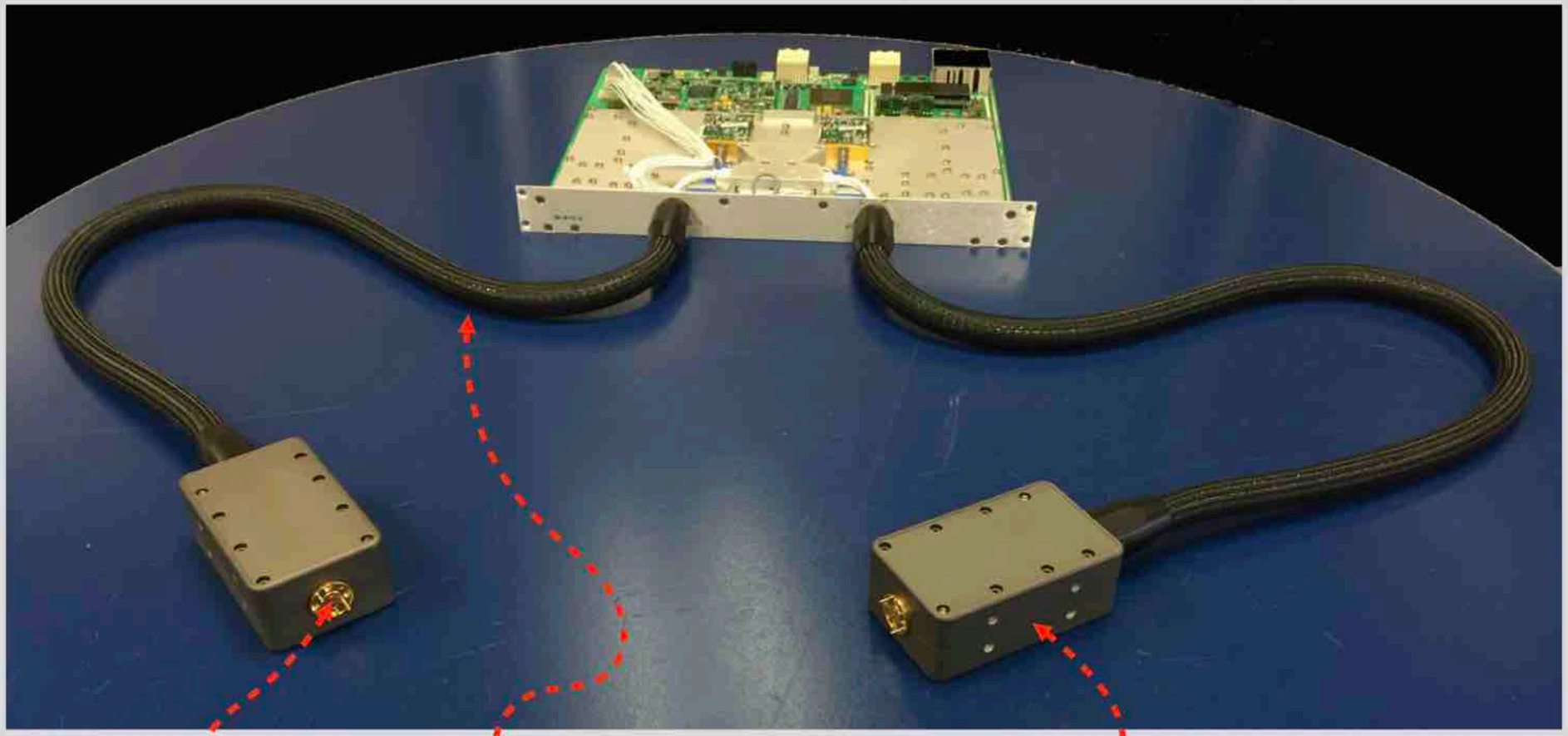

1 or 5 meter-Long Conduit

WR-12

1-Port VNA
E+ Band → [55 - 92] GHz
Low Power Consumption

Applications (Cont.)

NLTL-Based Tethered VNA: E-Band Near-Field Antenna Measurements

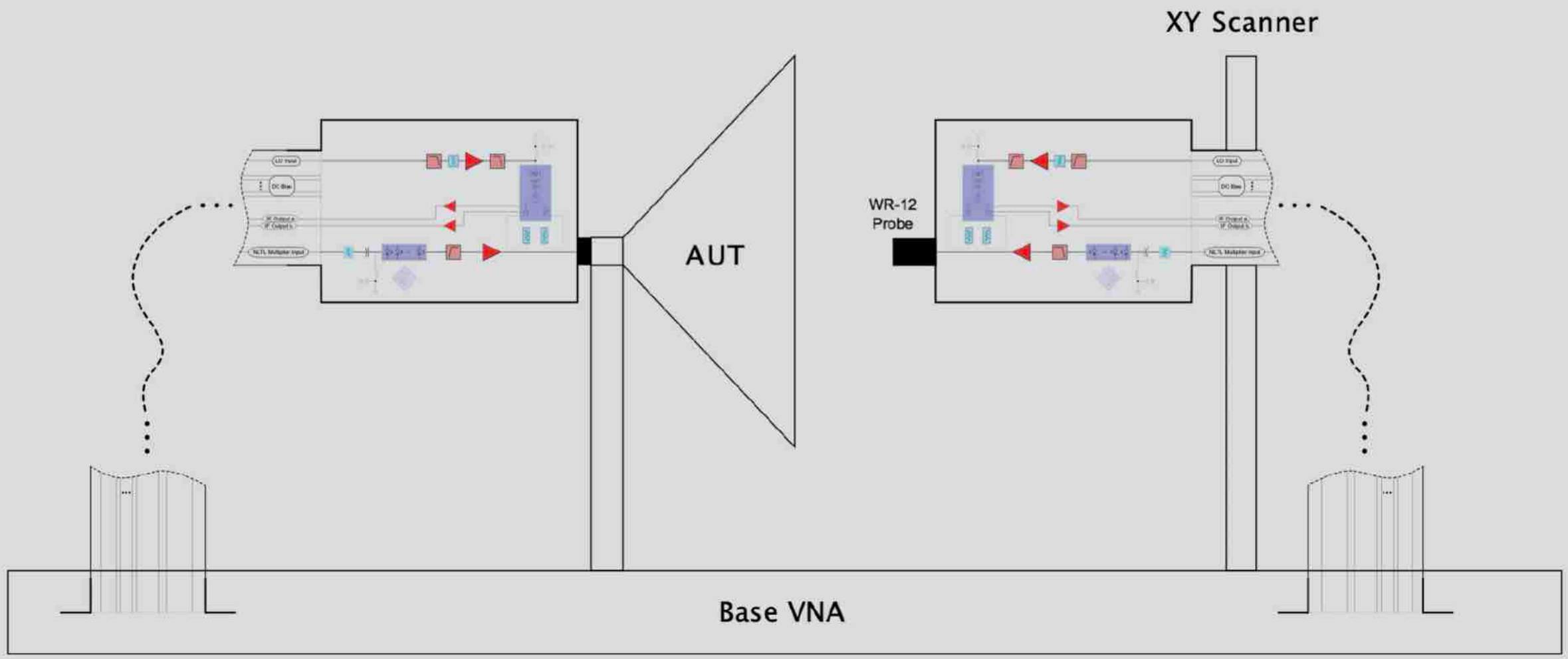

Cable Conduit →
LO: 4–8GHz
RF: 20–30GHz
IF: MHz
DC: Power & Control

Applications (Cont.)

Conceptual sketch: Near field or compact range possibilities. Absorber and other details not shown

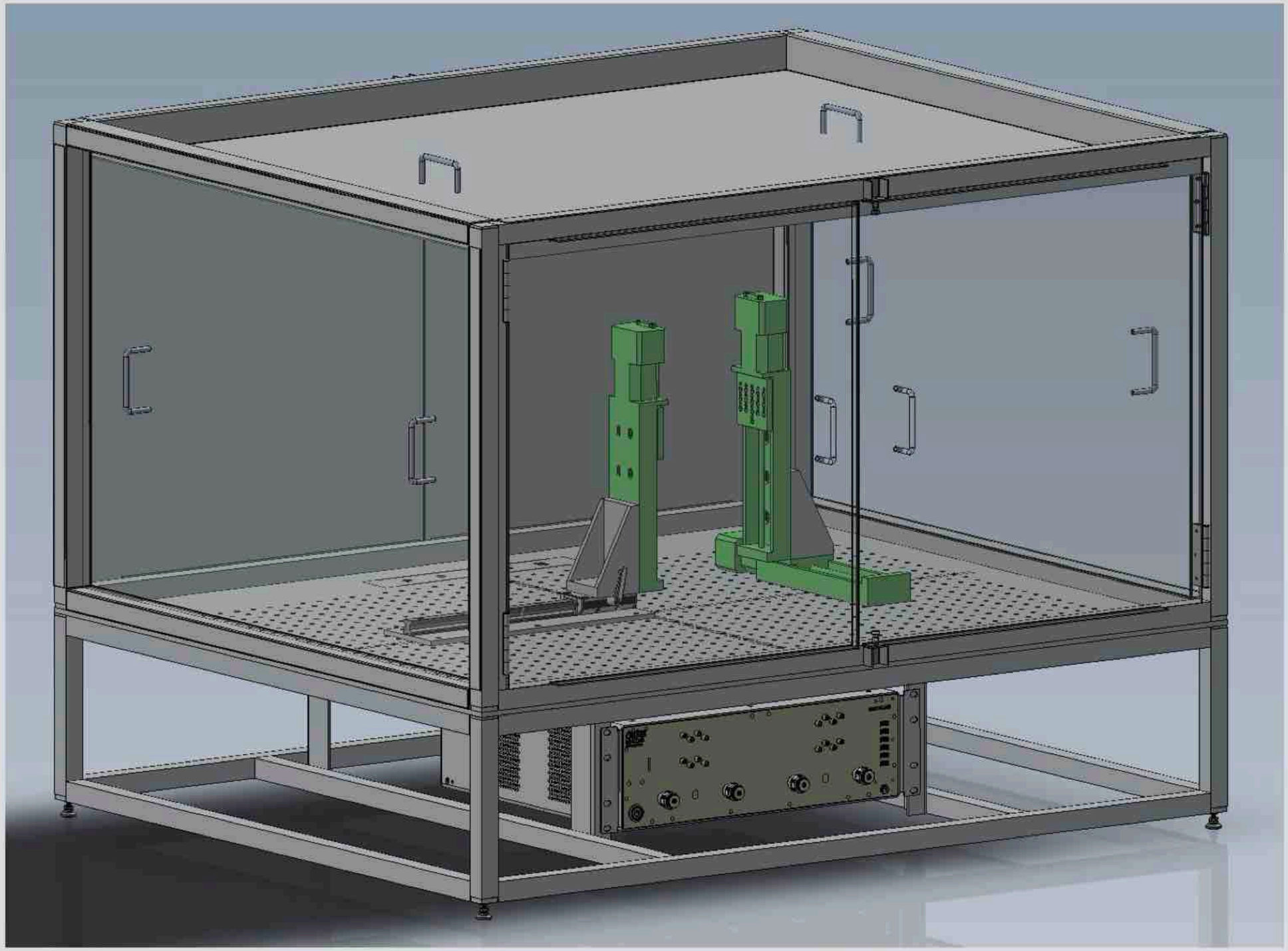

Applications (Cont.)

Payload Testing: Multiport DUT

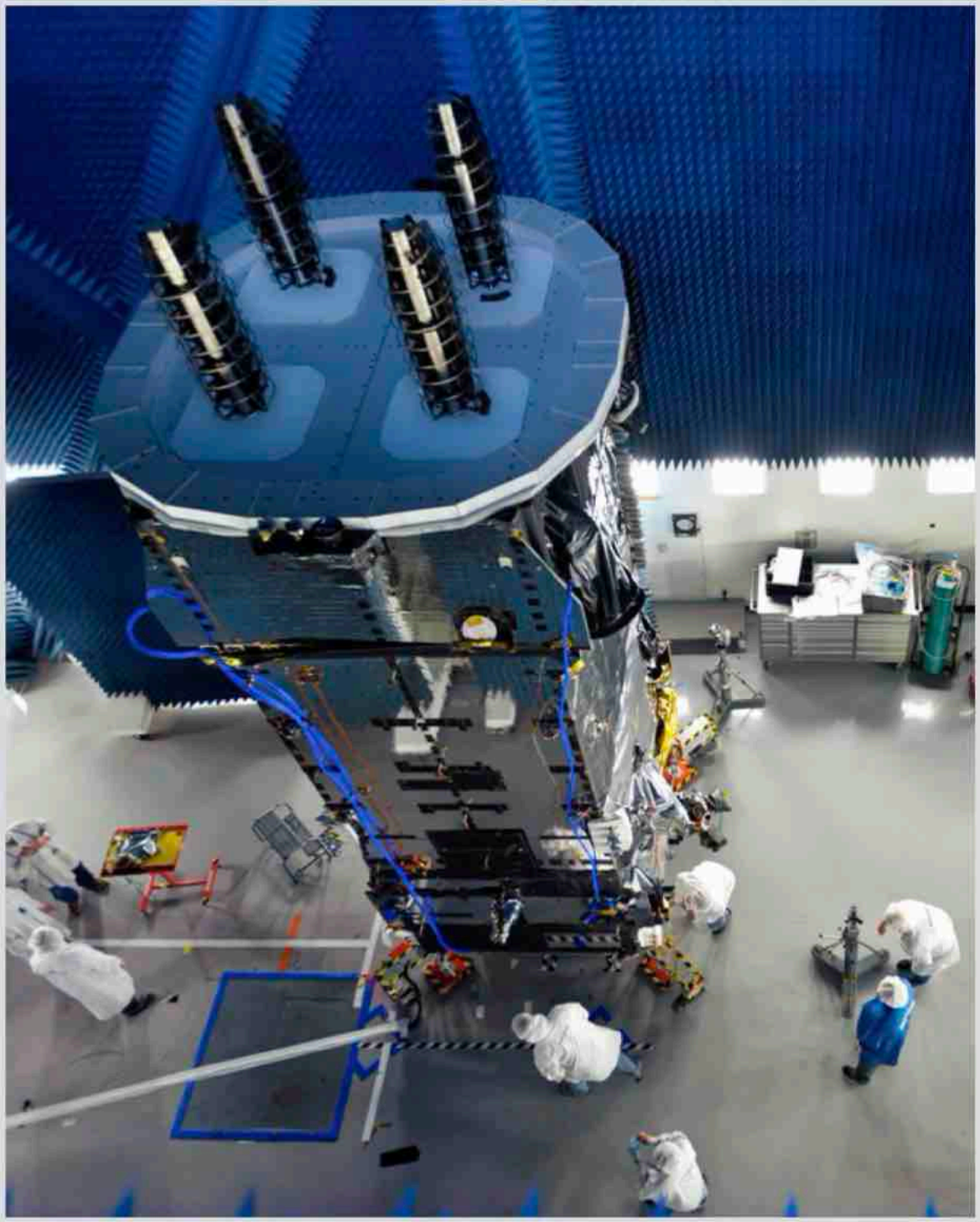

Reference: Intelsat by permission of the Boeing Company

Applications (Cont.)

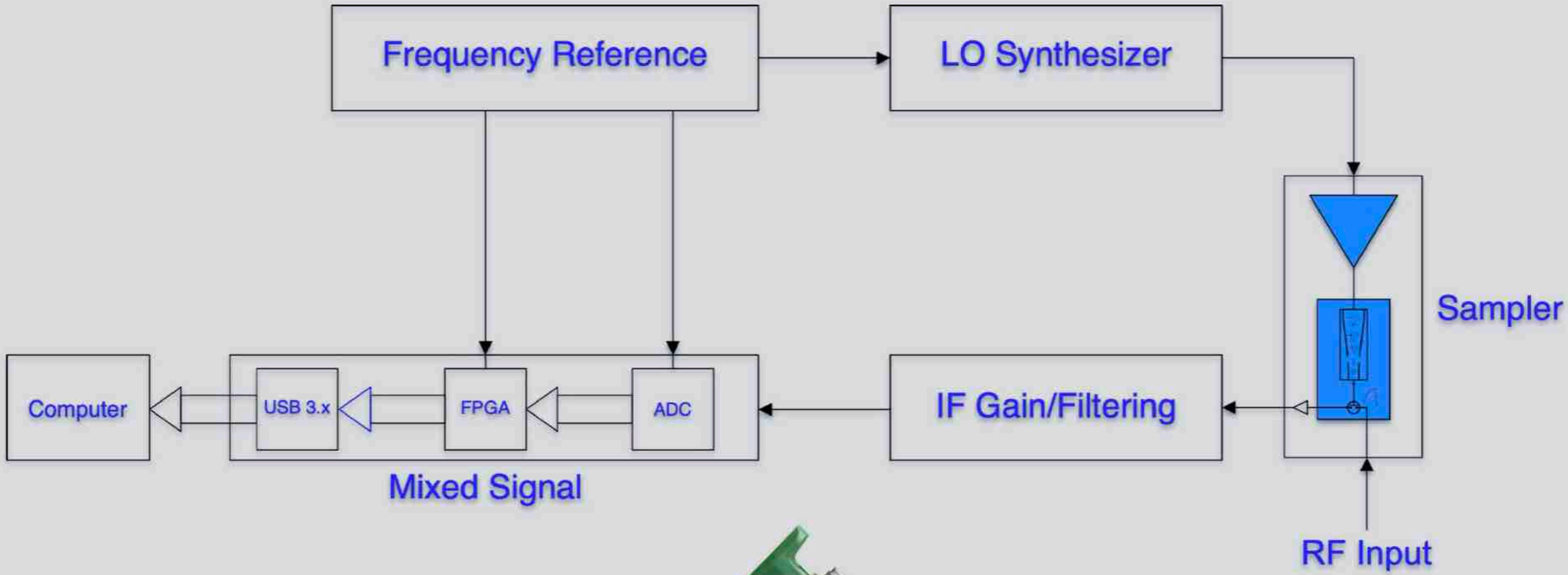

NLTL-Based Spectrum Analyzer

15.5 cm × 8.4 cm × 2.7 cm

Applications (Cont.)

Tethered Receivers

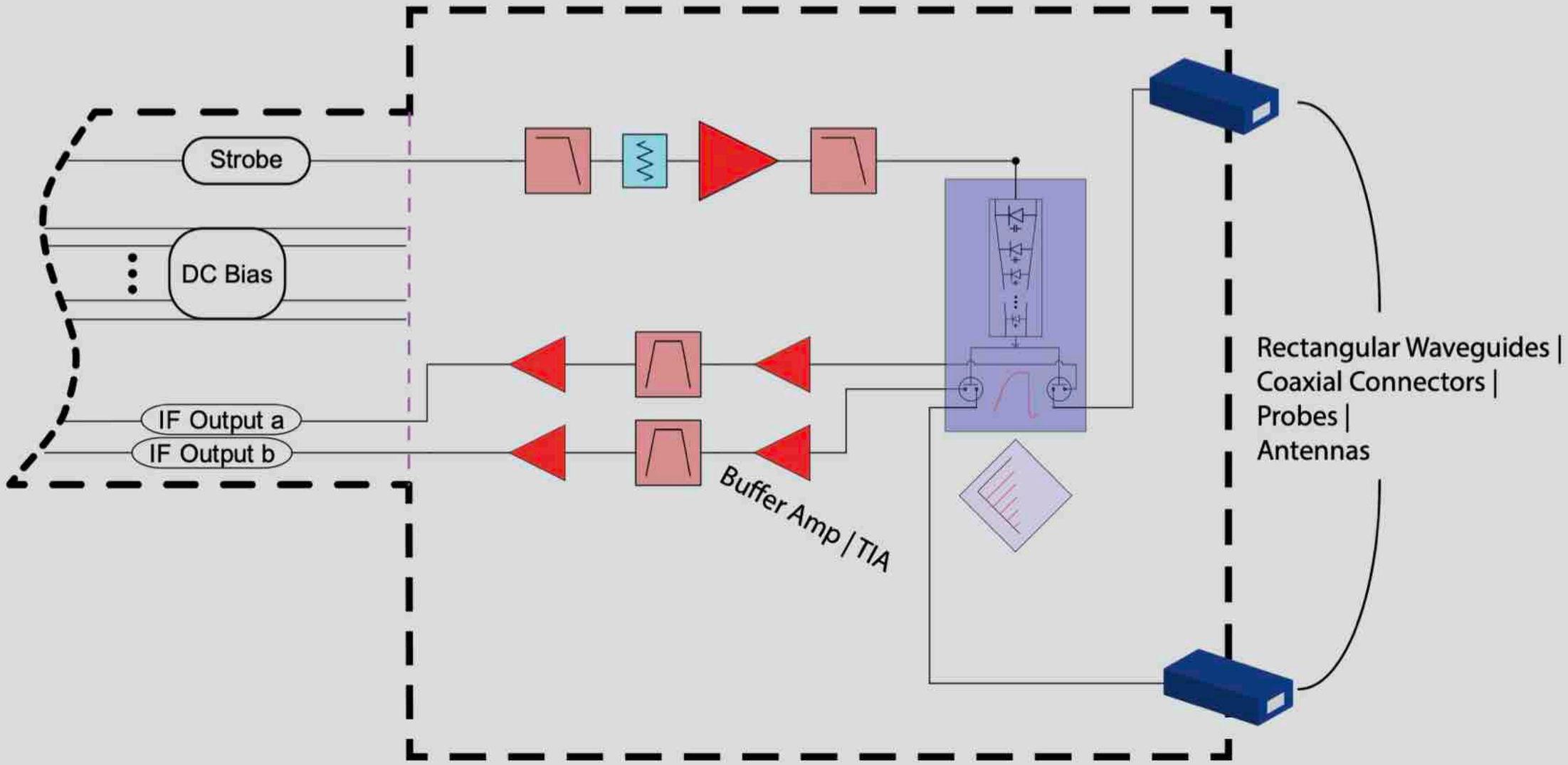

Applications (Cont.)

NLTL-Based SFCW Imager: Imaging of Concealed Copper Tape by SAFT at 60 GHz

WR-12, 9 mm away from 0.5” Gypsum Wall

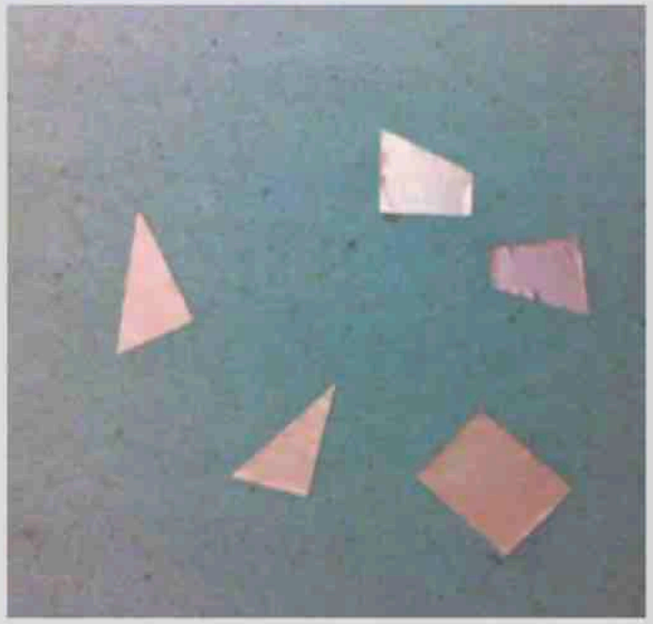

Applications (Cont.)

NLTL-Based SFCW Imager: Imaging of Gypsum by SAFT at 60 GHz

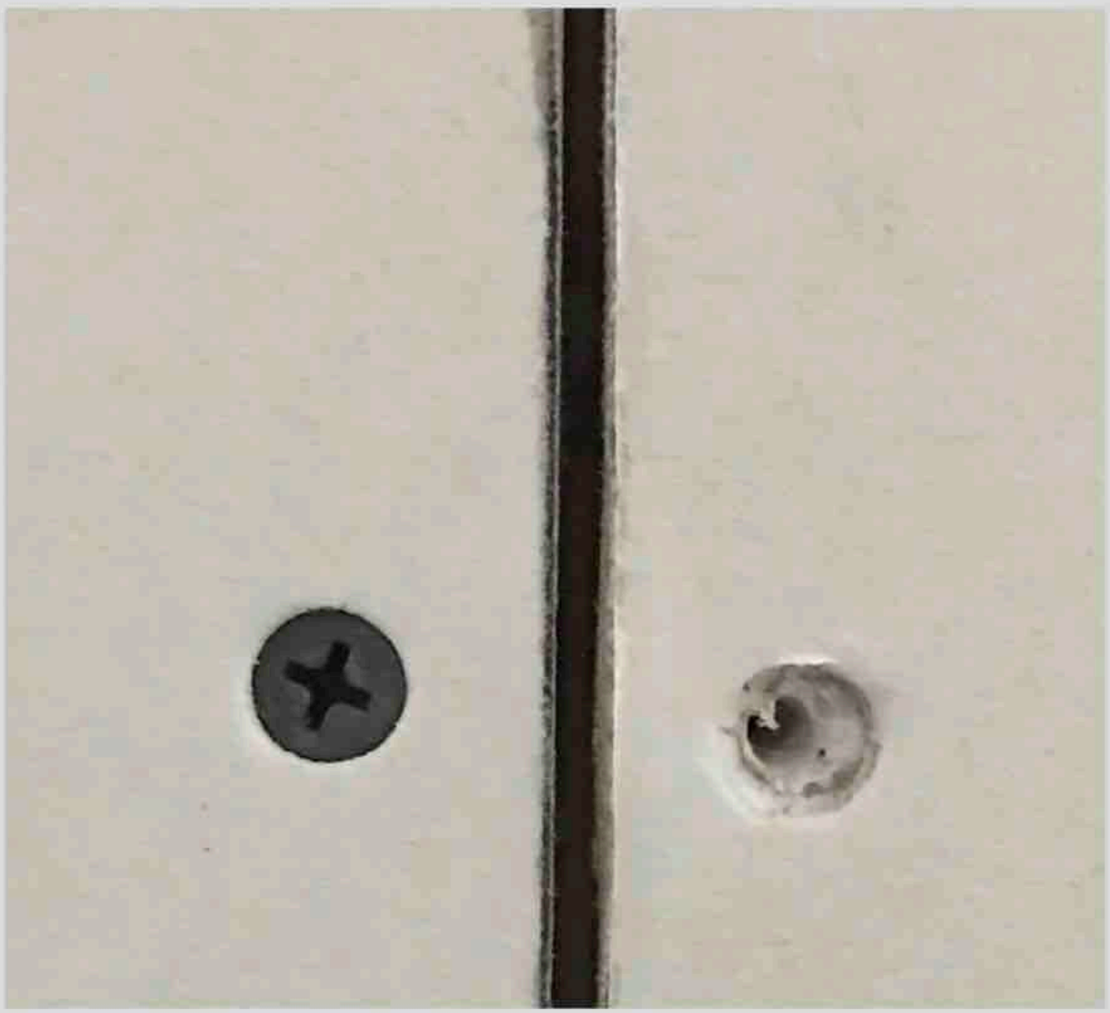

WR-12, 9 mm away from 0.5” Gypsum Wall

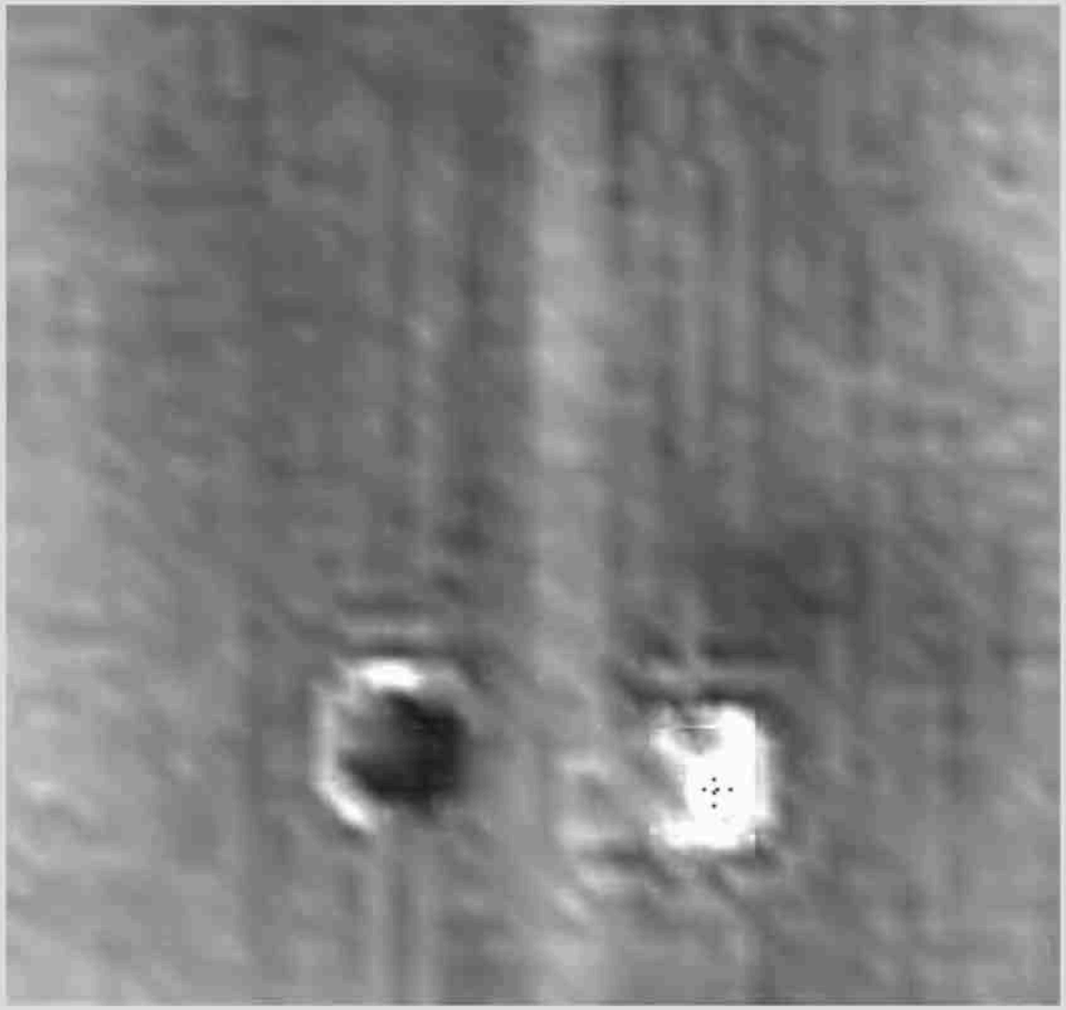

Applications (Cont.)

NLTL-Based SFCW Imager: Mono-static Case

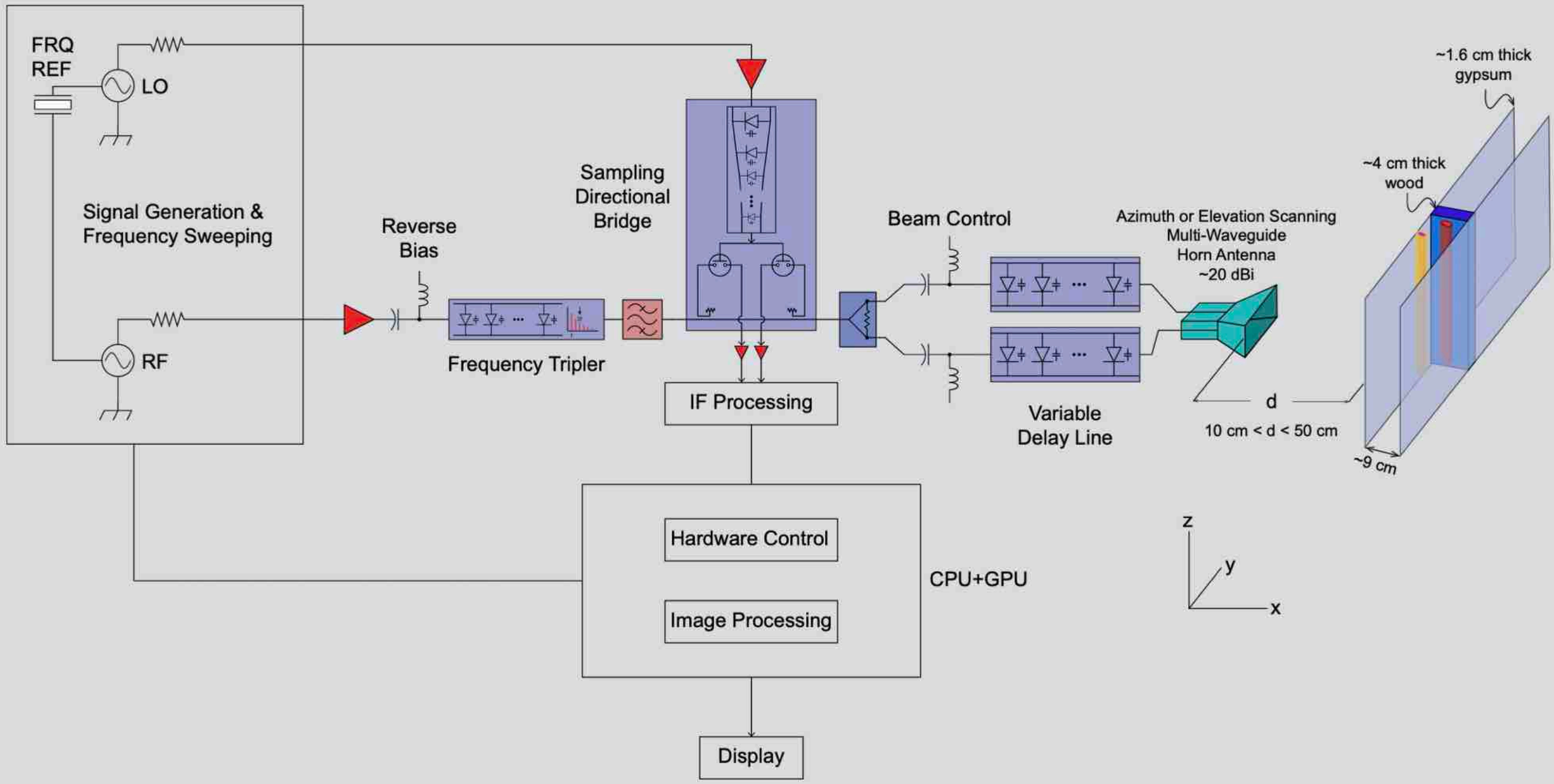

Applications (Cont.)

NLTL-Based SFCW Imager: Bi-static Case

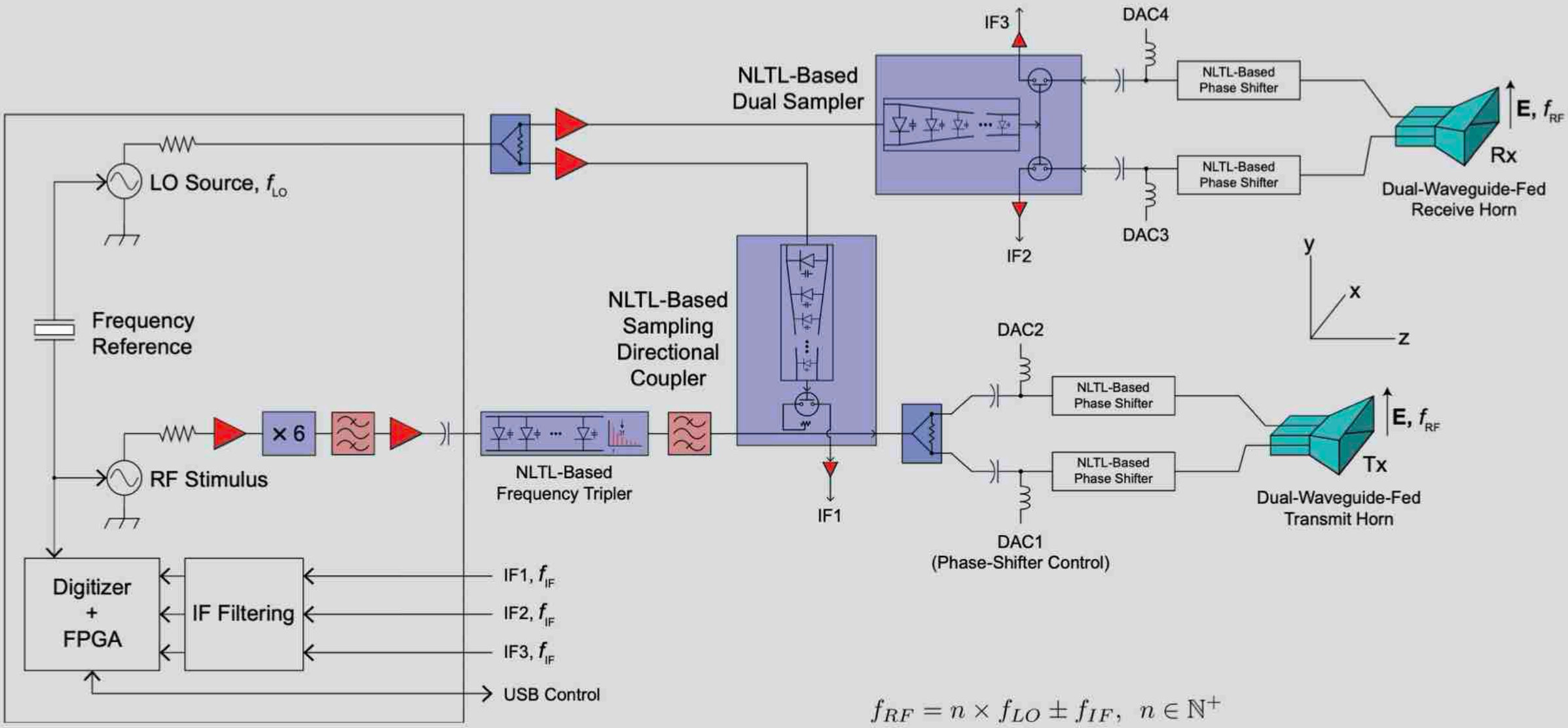

$$f_{RF} = n \times f_{LO} \pm f_{IF}, \;\; n \in \mathbb{N}^{+}$$

Applications (Cont.)

USB-Controlled NLTL-Based SFCW Imager Hardware

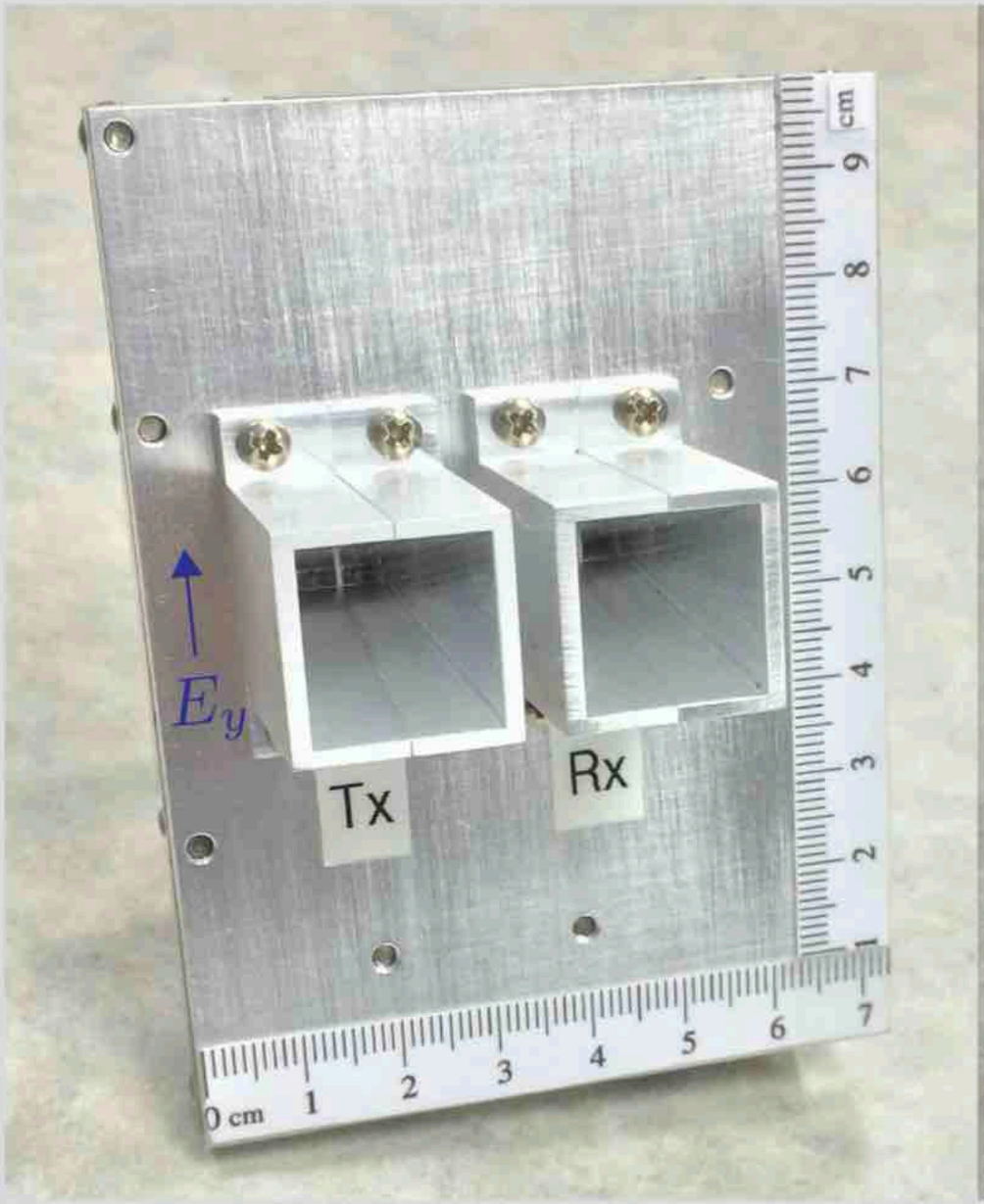

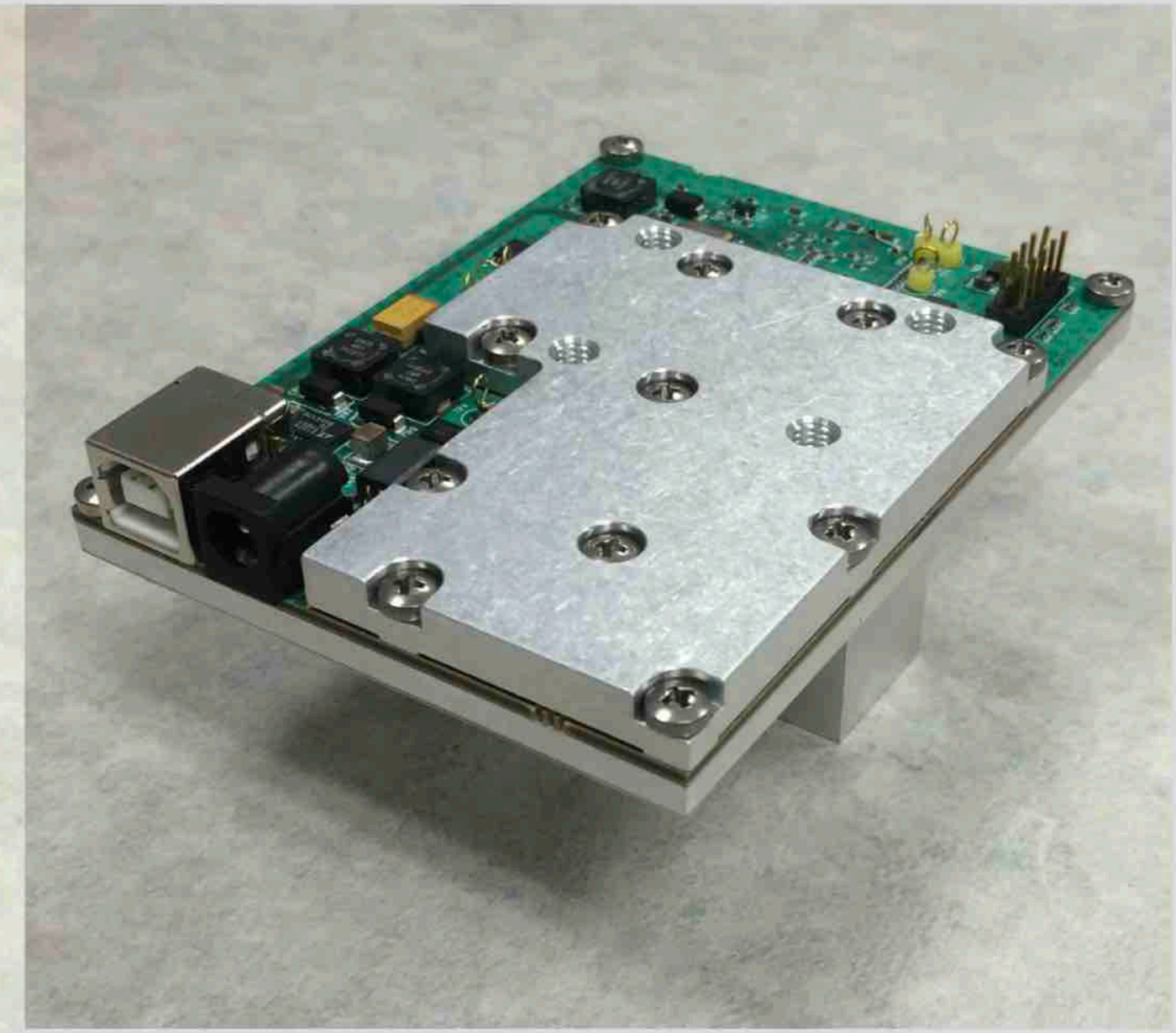

Applications (Cont.)

NLTL-Based SFCW Imager: Calibration

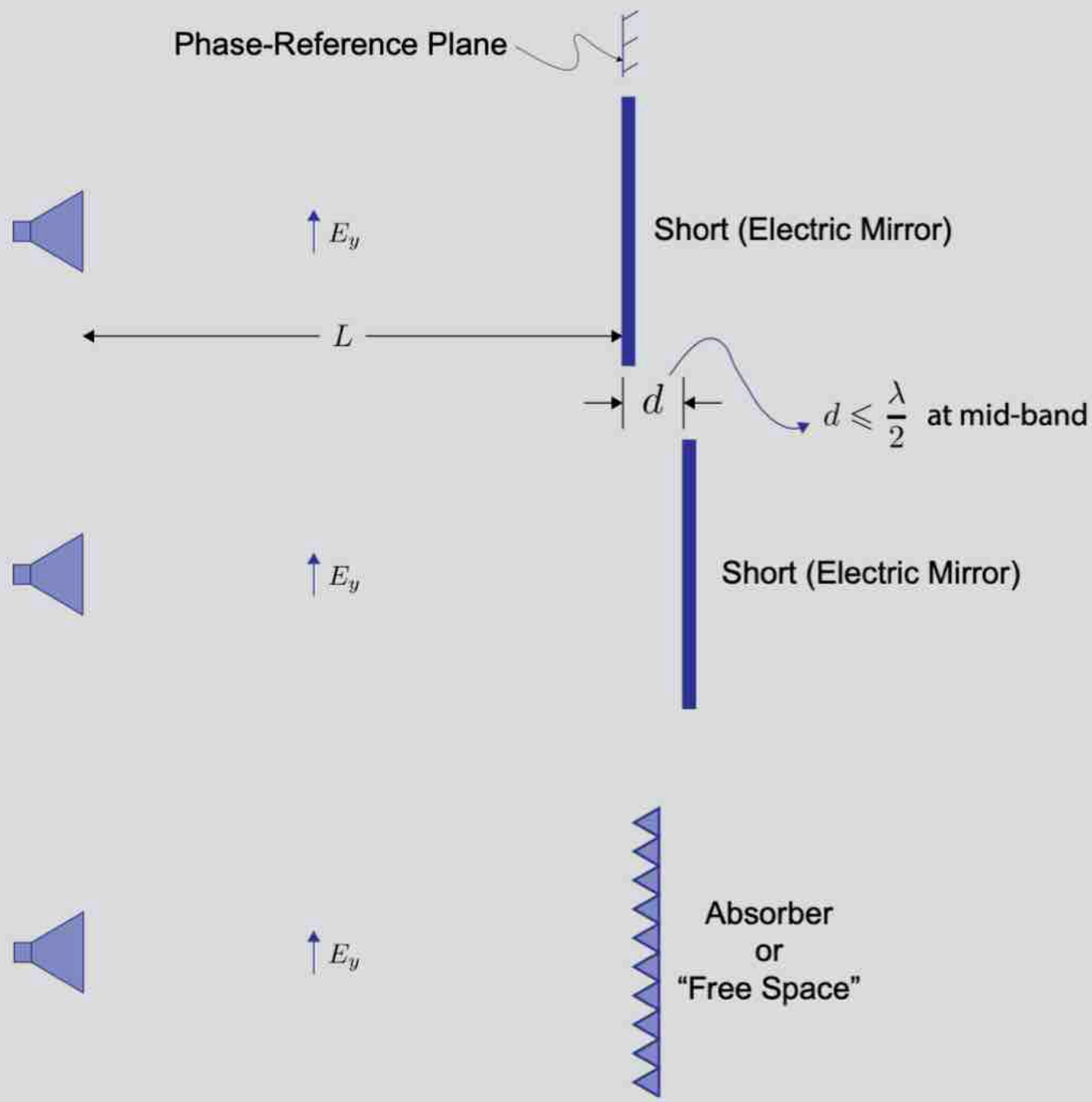

Applications (Cont.)

Dual-Aperture Horn Antenna

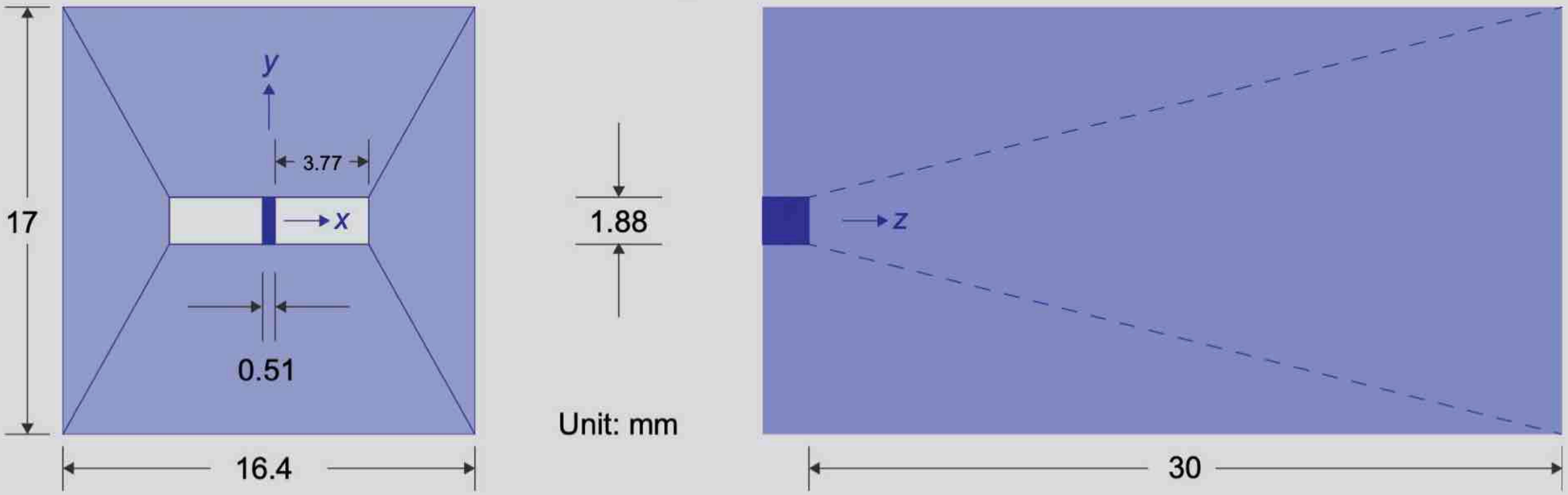

Measured *H*-Plane Magnitude Pattern at 57 GHz

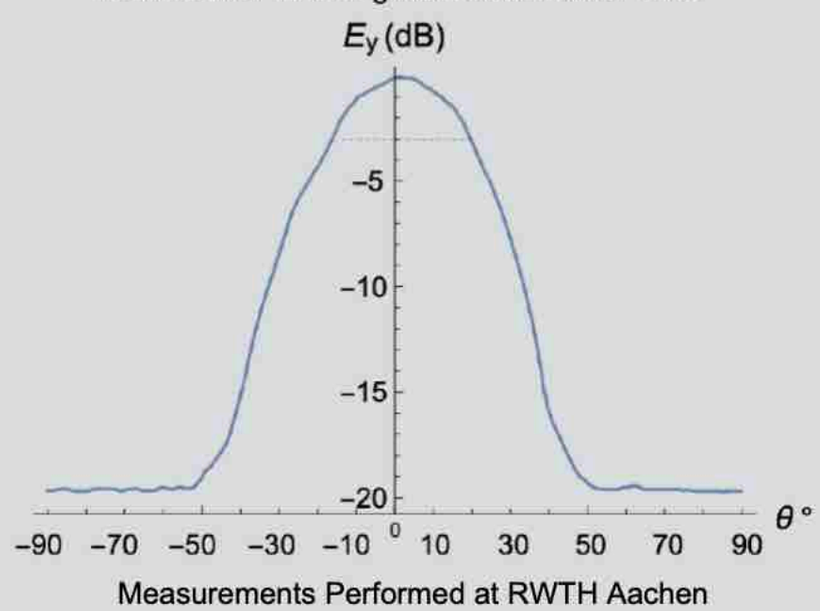

Measurements Performed at RWTH Aachen

Image Formation by SAR

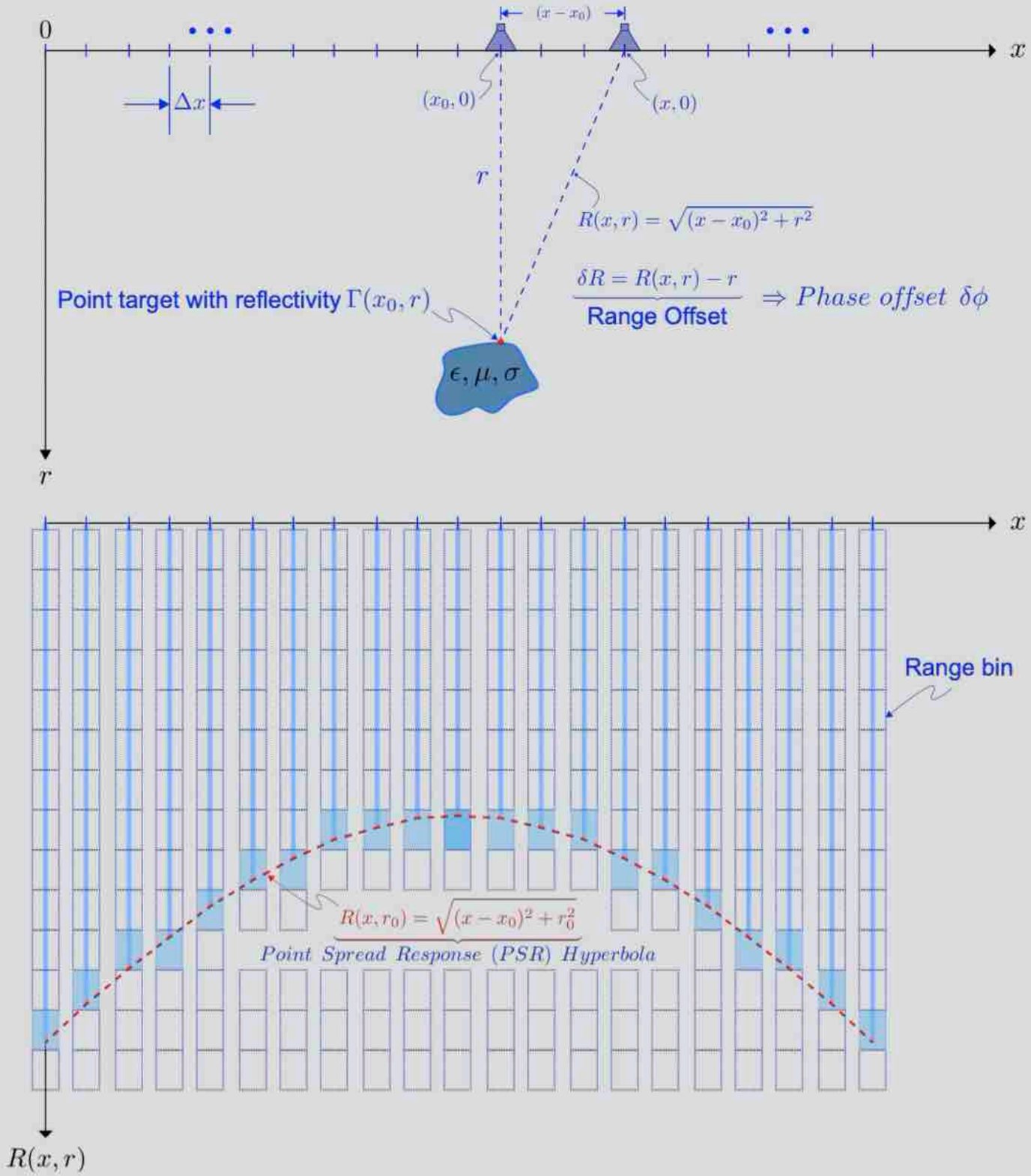

Image Formation by SAR (Cont.)

- Motivation
  - Targets appear coherently at each antenna site
  - Noise between antennas is incoherent
- Algorithm
  - Consider each range bin for each antenna site
  - Apply phase offset to that bin as seen from other antenna sites
  - Sum response from all antenna sites and obtain SAR response for this range bin
- Advantages
  - Spatial averaging decreases noise
  - Larger effective aperture improves cross-range resolution
  - Cross-range resolution is independent of target range

Linear Scanning Stage: Scene I

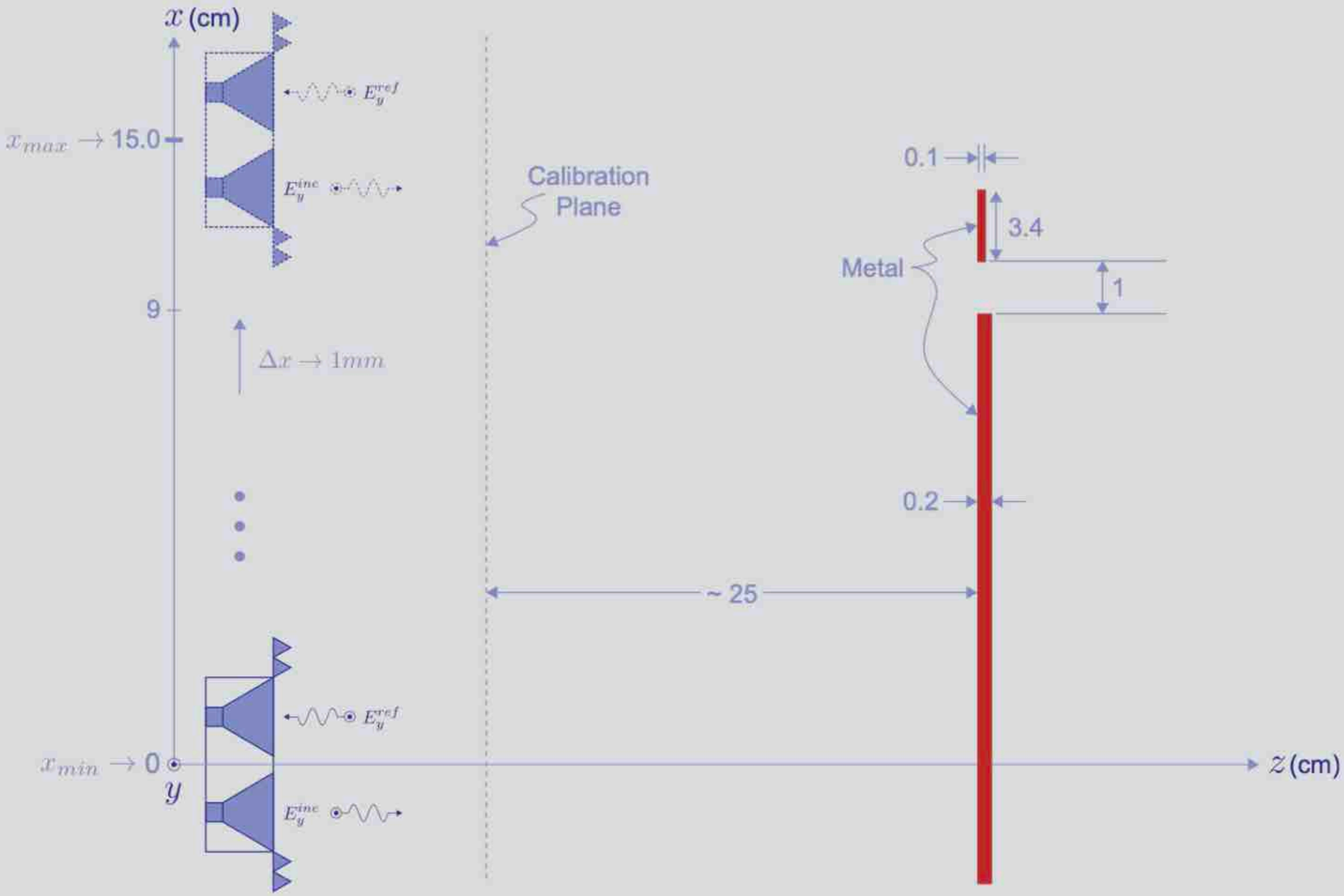

$$\left.\begin{array}{l} f_{RF} \in [54 - 60.75]\ GHz \\ \Delta f = 45\ MHz \\ N = 150 \\ BW = 6.75\ GHz \\ f_{if} = 10\ MHz \end{array}\right\} \Rightarrow \left\{\begin{array}{l} \Delta R = \dfrac{c}{2N\Delta f} = 2.22\ cm \\ R_{max} = \dfrac{c}{2\Delta f} = 3.33\ m \end{array}\right.$$

$N_{averages} = 500$
$Kaiser(6)$

Scene I: Raw vs. SAR Focused Range Profile

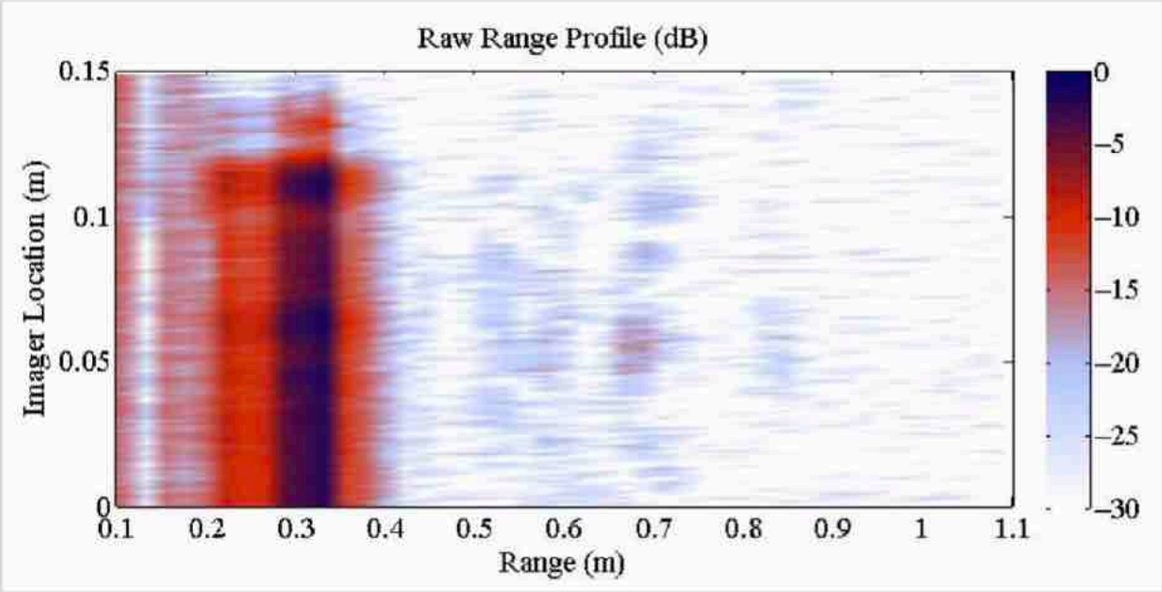

- Benefits of SAR
  - Introduces 30 dB gain
  - Improves SNR by 10 ~ 15 dB
  - Improves cross-range resolution to < 1 cm

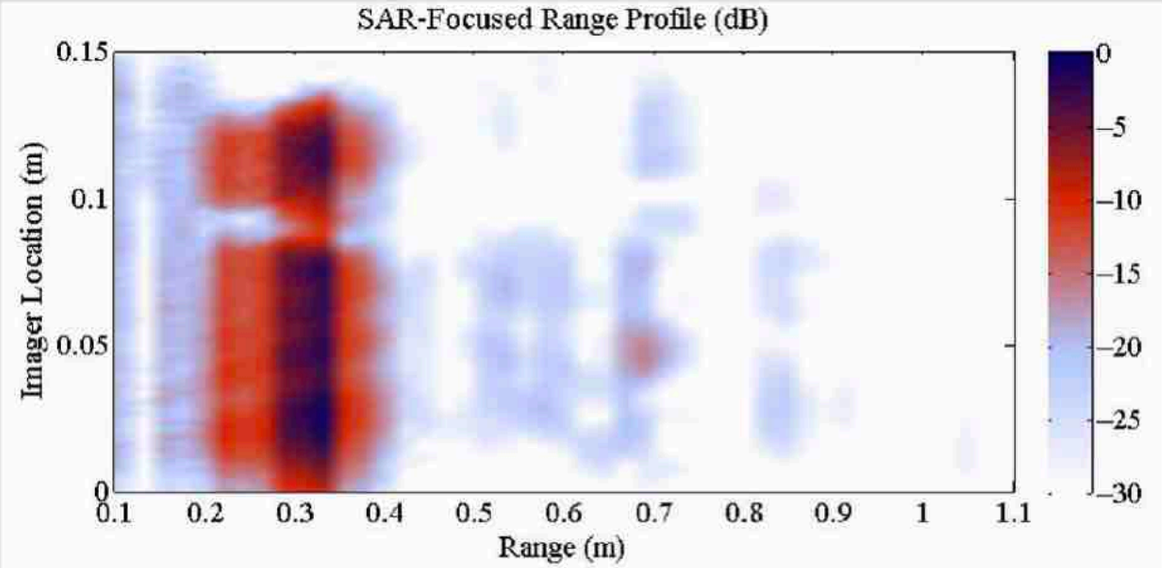

Scene I: Multiple Reflections

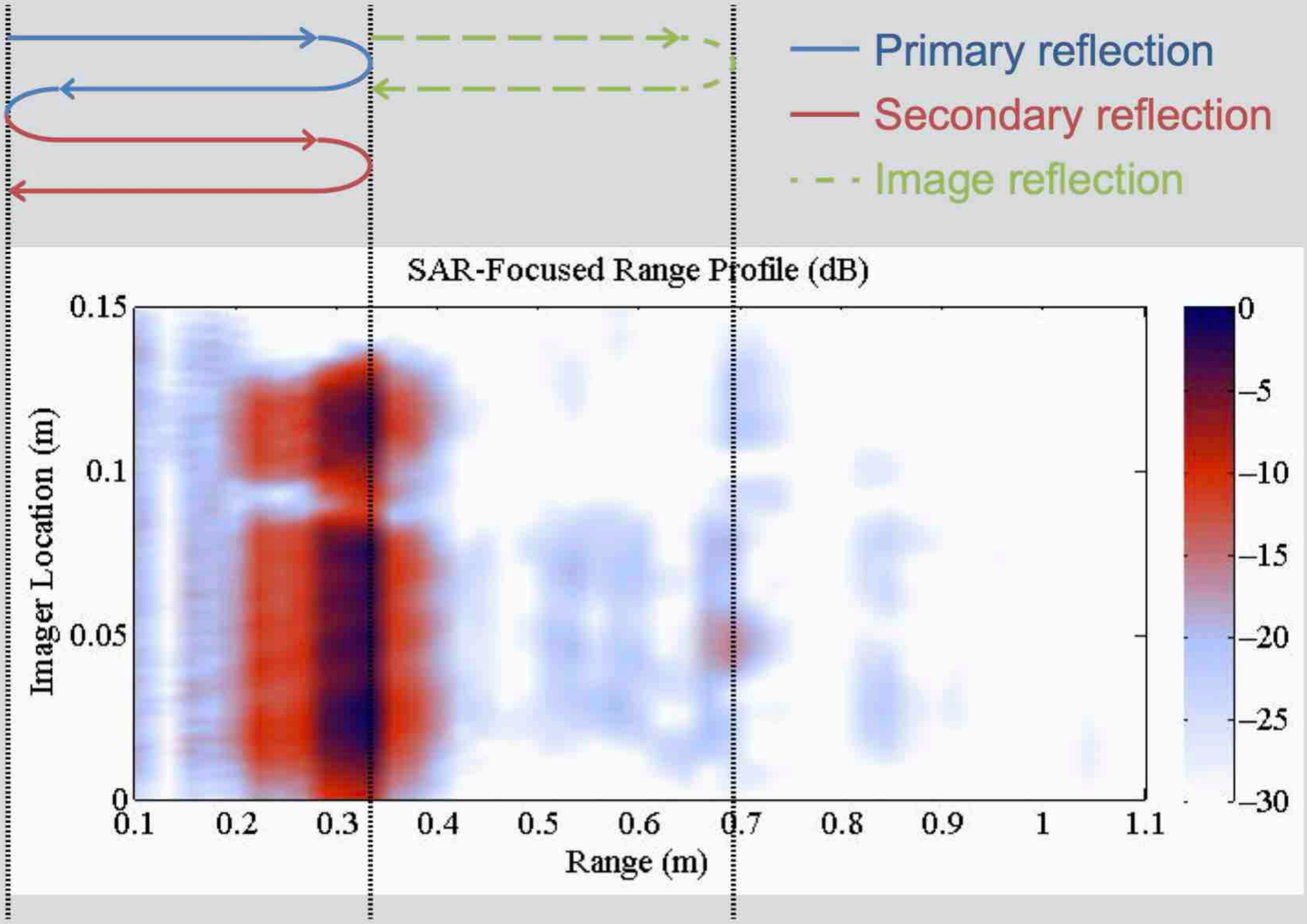

Linear Scanning Stage: Scene II

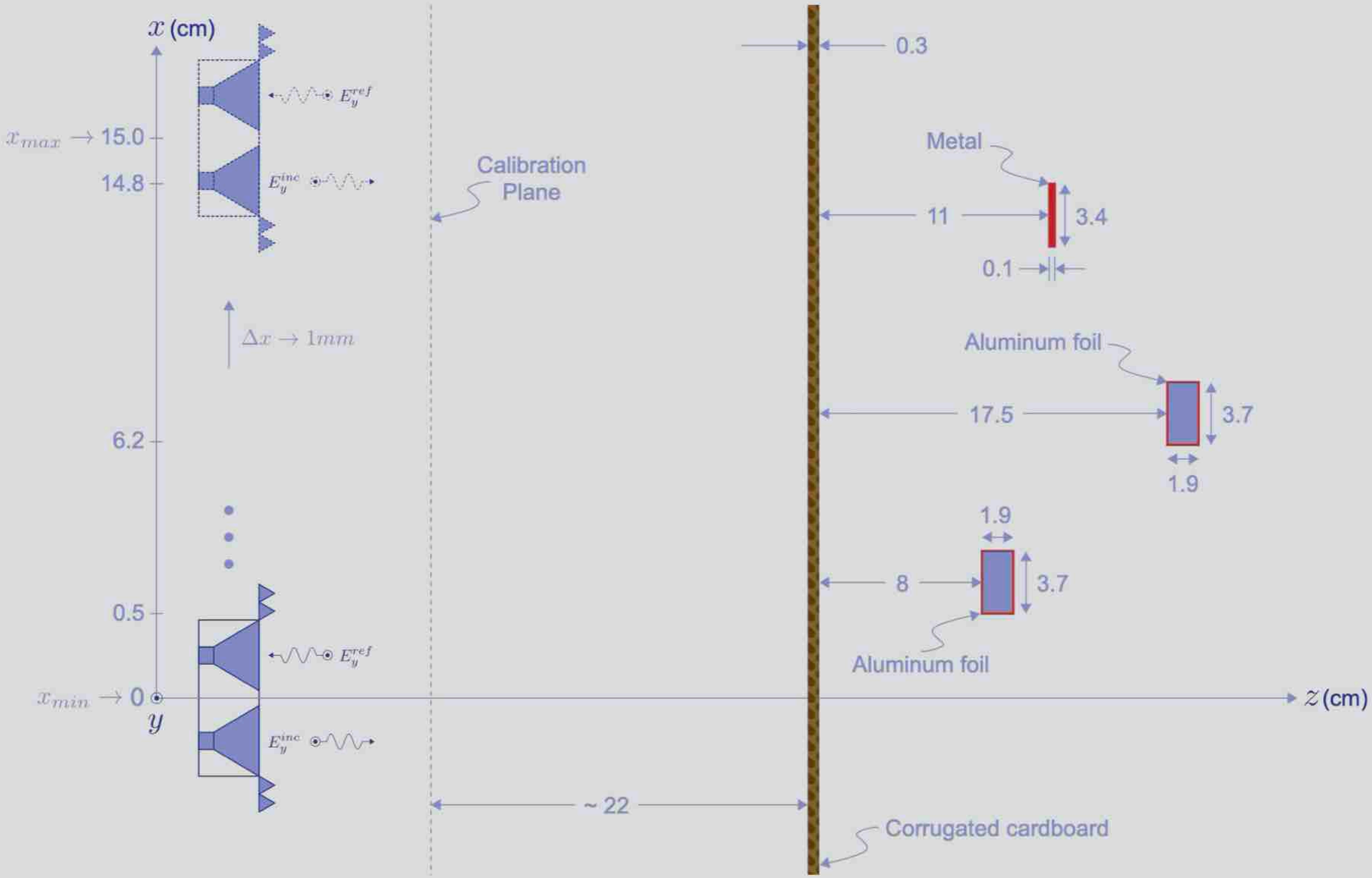

Linear Scanning Stage: Scene II

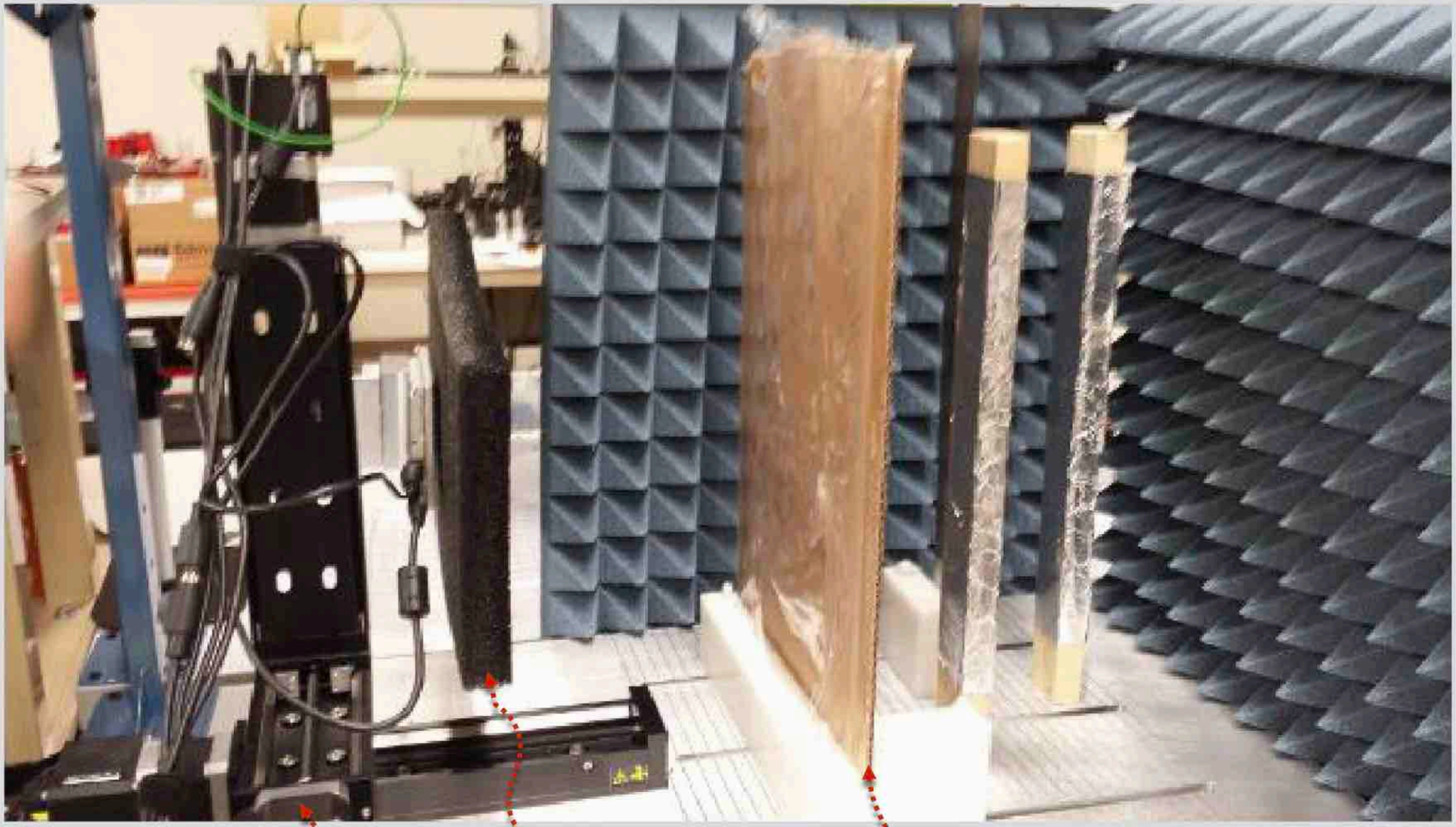

Corrugated cardboard

Absorber

Linear X stage

Scene II: Raw vs. SAR-Focused Range Profile

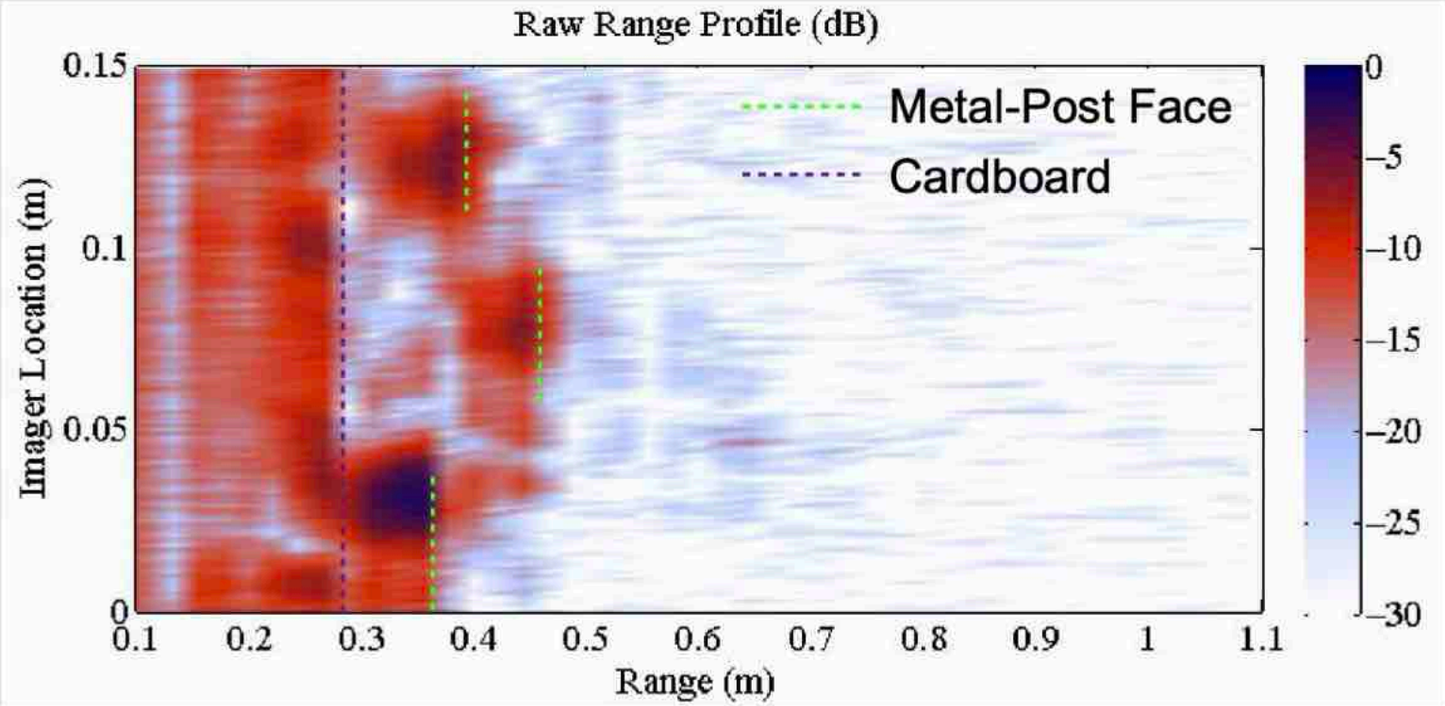

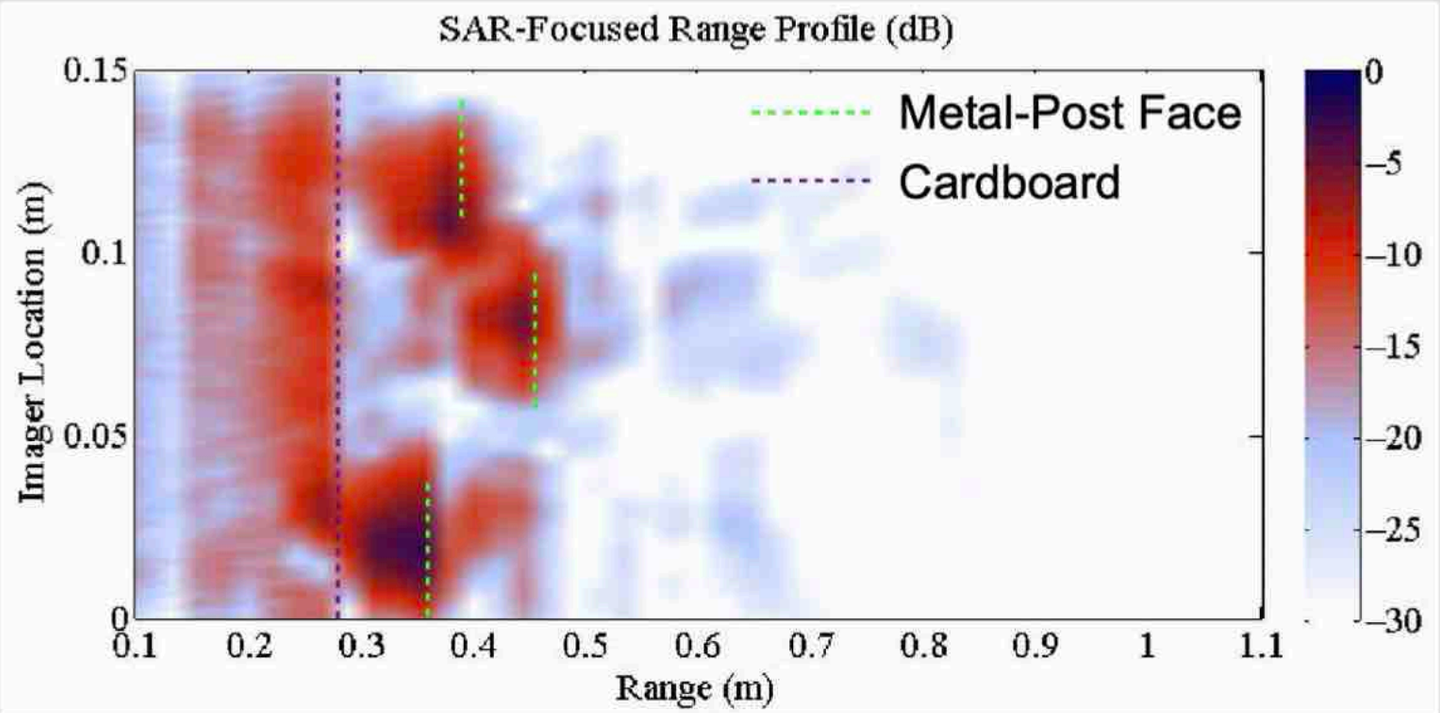

Scene III: SAR-Focused Range Profile

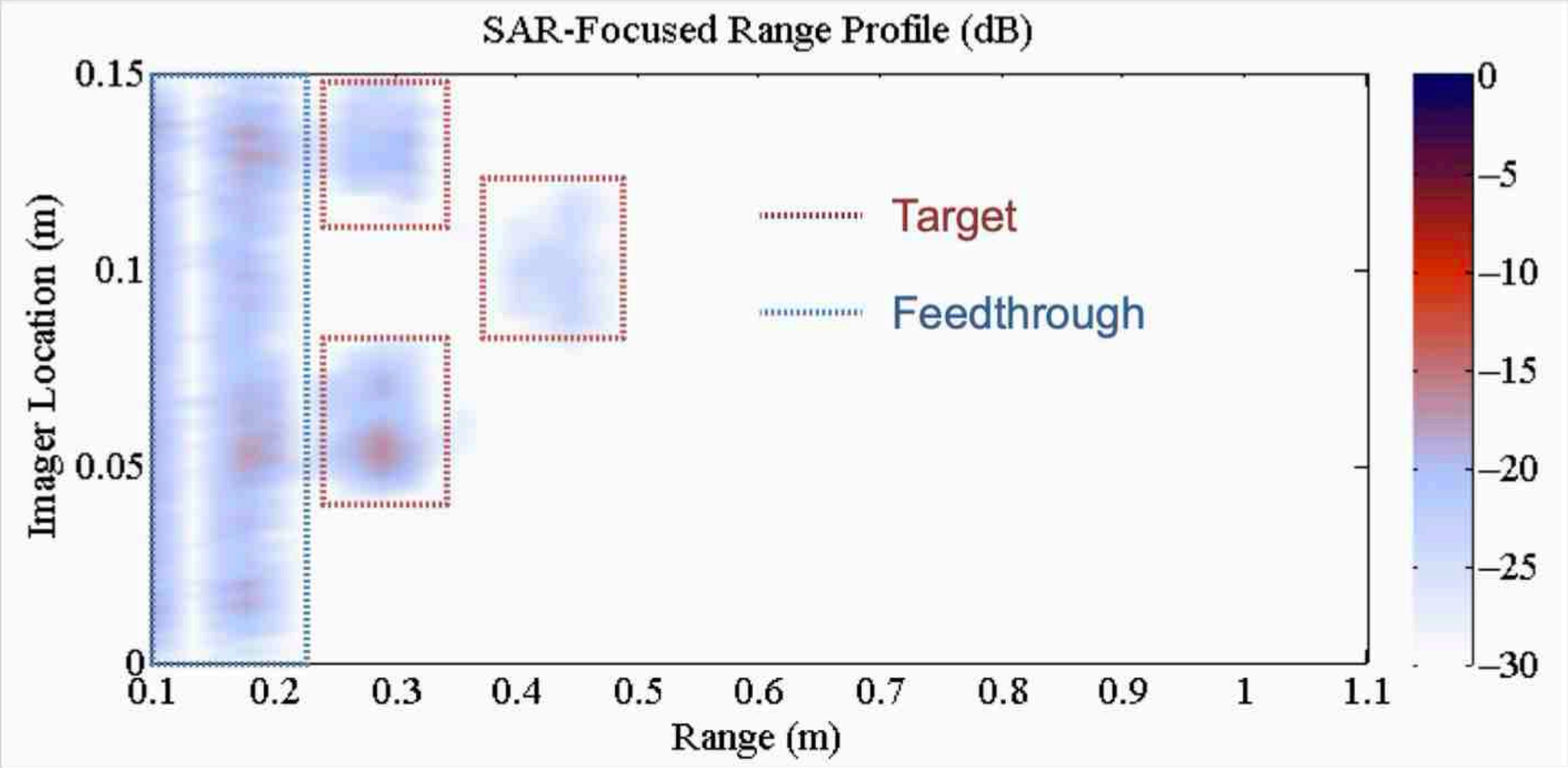

- Concealed wooden targets
  - SAR-focused range profile normalized to metal response
    - Dynamic range exceeds 20 dB
    - Saturation due Tx/Rx feedthrough suppressed
    - Capable of capturing -20 dB returns
    - Post-SAR SNR improved by ~10 dB

Accelerated Frequency Sweep

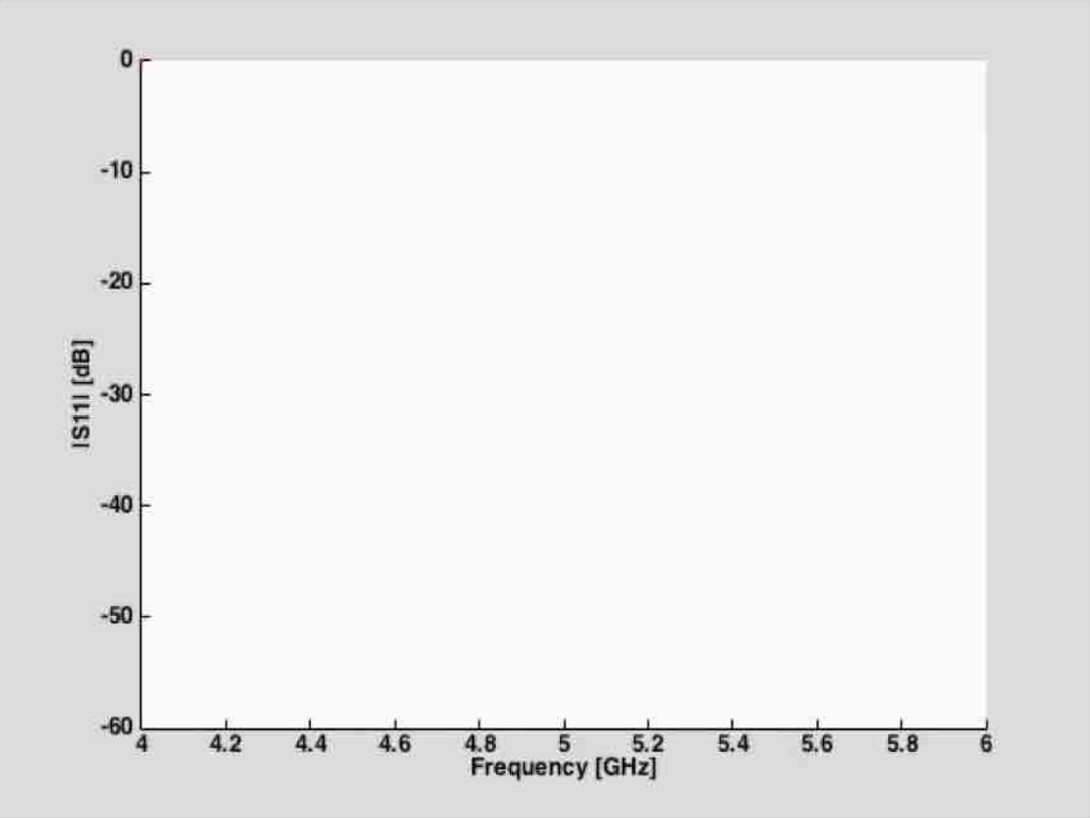

Uniform Frequency Sweep

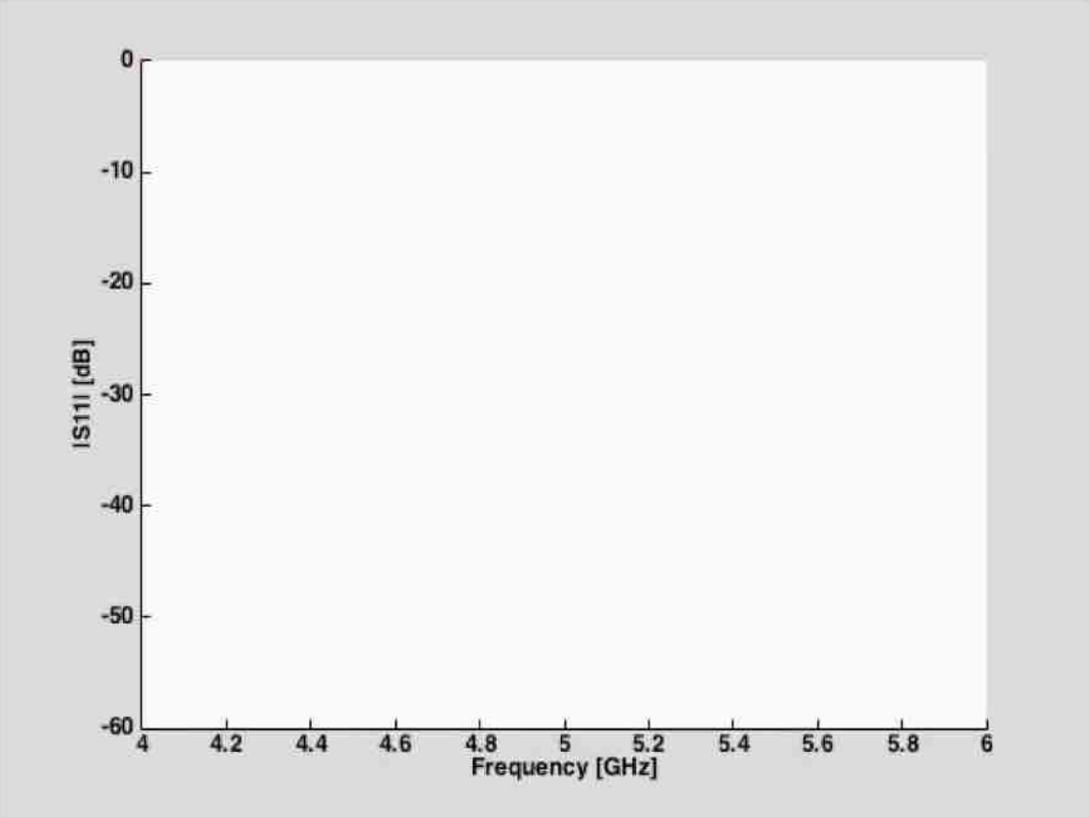

Nonuniform Frequency Sweep

Broadband mm-Wave Miniaturization

10 MHz–110 GHz VNA

70 KHz–70 GHz VNA

55–90 GHz SFCW Imager

70 KHz–145 GHz VNA

75–110 GHz VNA Extension

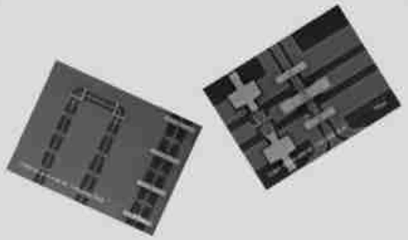

Anritsu NLTL-Based Technology

54–145 GHz VNA Extension

54–220+ GHz VNA Extension

VNA-Based mm-Wave Imager

MHz–40 GHz Handheld VNA

9 KHz–170 GHz Spectrum Analyzer
15.5 cm × 8.4 cm × 2.7 cm

55–92 GHz Tethered VNA